PYROSTYLE

FIRE RATED DOORS & SCREENS

TECHNICAL DETAILS

ABOUT US

The Pyrostyle Integrity and Insulated Fire Rated Door and Screen Systems combines inspirational design flair with performance rated protection for a distinctive solution to your building.

Whatever the commercial application from escape corridor to lift lobby or shopping mall; from public area to staircase enclosure or building separation screen, choose the Pyrostyle Integrity or Insulated fire doors and screens for guaranteed inspiration to your building.

FIRE RATINGS

- E30 (30/0), 30 minutes integrity only
- E60 (60/0), 60 minutes integrity only
- EI30 (30/30), 30 minutes integrity and insulation
- EI60 (60/60), 60 minutes integrity and insulation
- E120/ EI60 (120/60), 120 minutes integrity and 60 minutes insulation

Access Control

Integrity

- Trimec ES8000 V-lock fully concealed
- Abloy 351 U 80 solenoid lock full concealed

Insulated

- Abloy 351 U 80 solenoid lock full concealed

Ironmongery

Integrity

- Dorma BTS75V manual floorspring
- BTS80 EMB electro-mechanical hold-open floorspring

Insulated

- GEZE TS550 NV FP manual floorspring
- GEZE TS550 E electro-mechanical hold-open floorsprings

Handles

- 19-32mm diameter tubular handles available in satin stainless steel, polyester powder coated or PVD coated finishes

Surface Finishes

- Stainless steel 240 grit satin brushed (No. 4) polished finish
- Stainless steel mirror (No. 8) polished finish
- Stainless steel PVD coated or Rimex sheet
- Mild steel PPC finish to standard range RAL colours, 30% gloss
- Various specialist patinated finishes to bronze/ brass cladding sections

Automatic Operation

- Pyrostyle door systems have been fully tested and certificated for use with Dorma Kaba ED100/250 surface mounted drive units for up to 60 minutes fire resistance
- Fully automatic with no touch sensors or power assist options available

Smoke Protection

- Pyrostyle screens have been successfully tested for cold smoke resistance to EN 1634-3

Door Operation

- Single or double action operation available on both Integrity and Insulated door types

Manifestations

- Applied vinyl manifestations can be fitted to all screens where required but only on the designated fire attack face

PYROSTYLE INTEGRITY E60 TYPE C DOOR CONFIGURATIONS

1

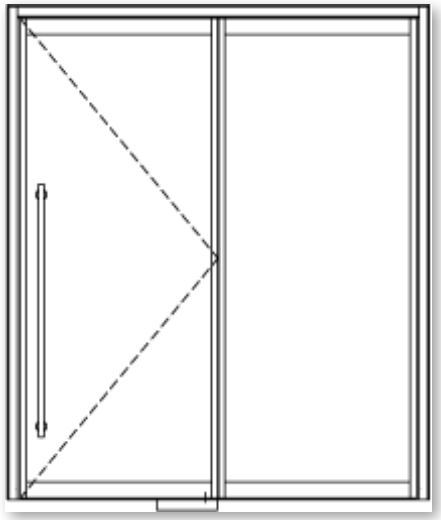

2

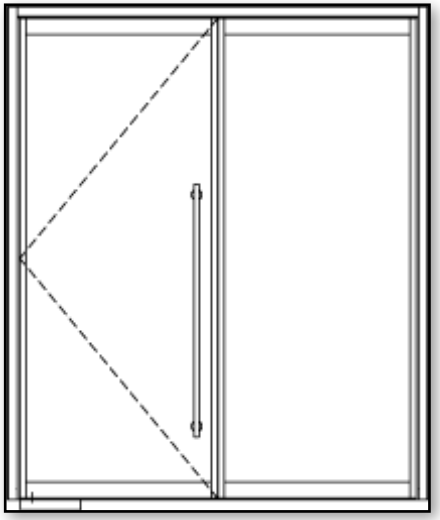

3

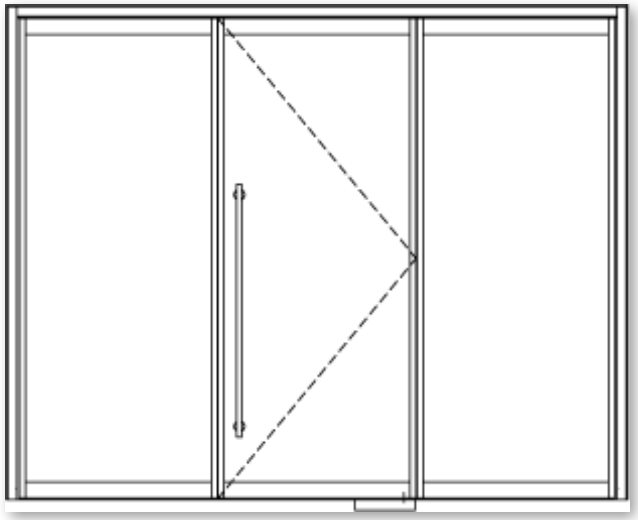

4

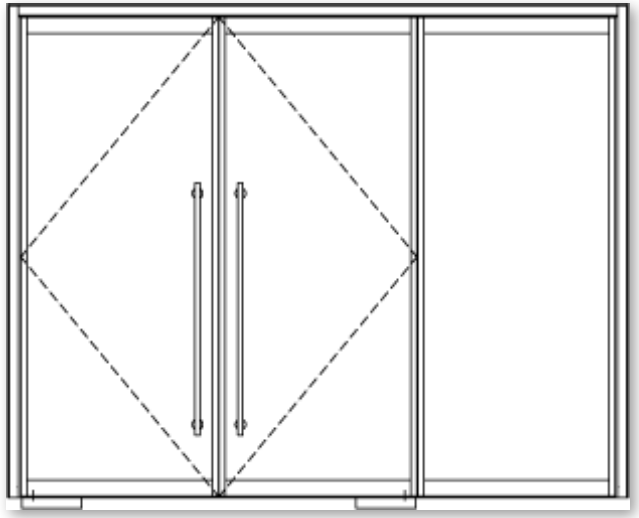

5

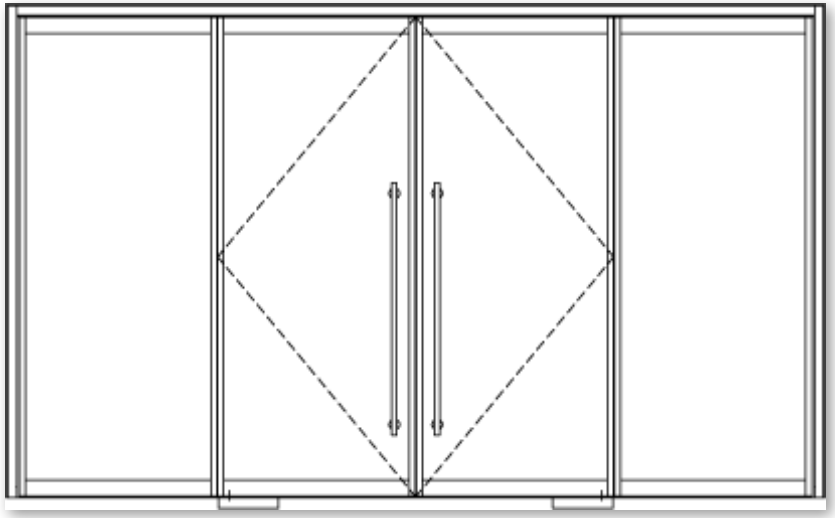

PYROSTYLE INTEGRITY E60 TYPE C DOOR MAXIMUM SIZES

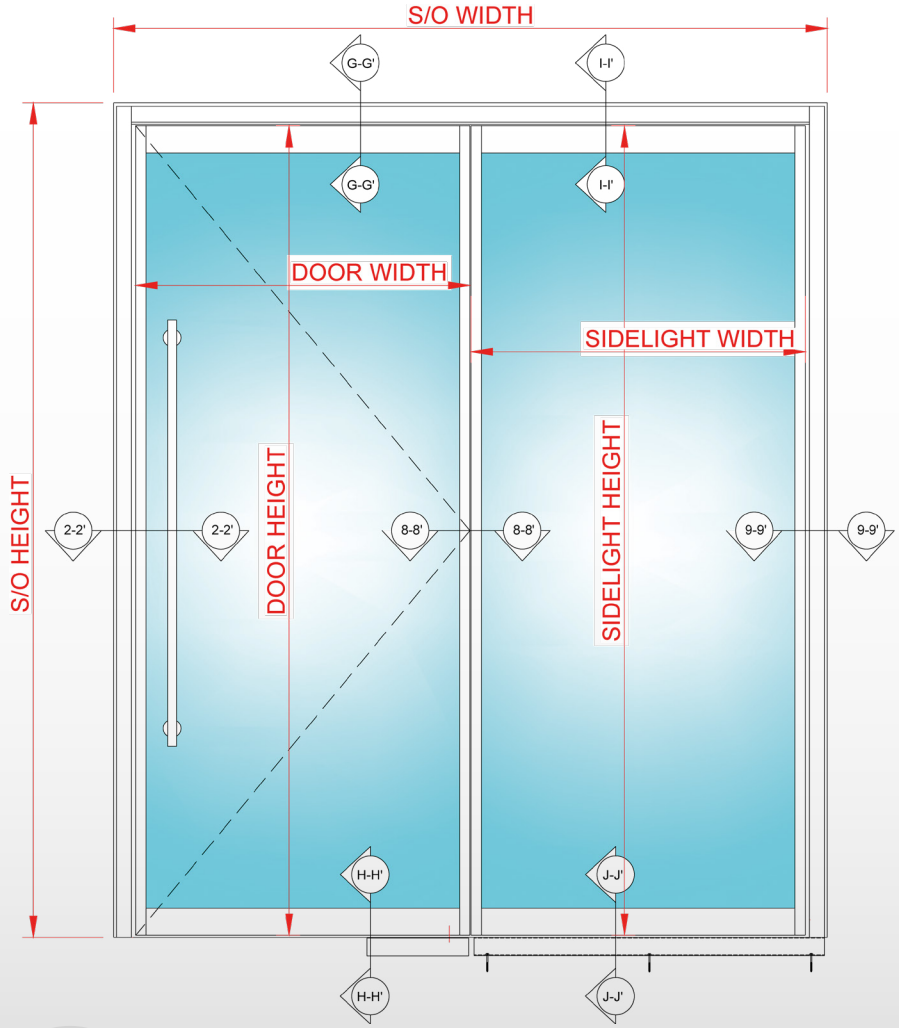

1

- 2392(w) x 2837(h) mm
- 2184(w) x 3117(h) mm

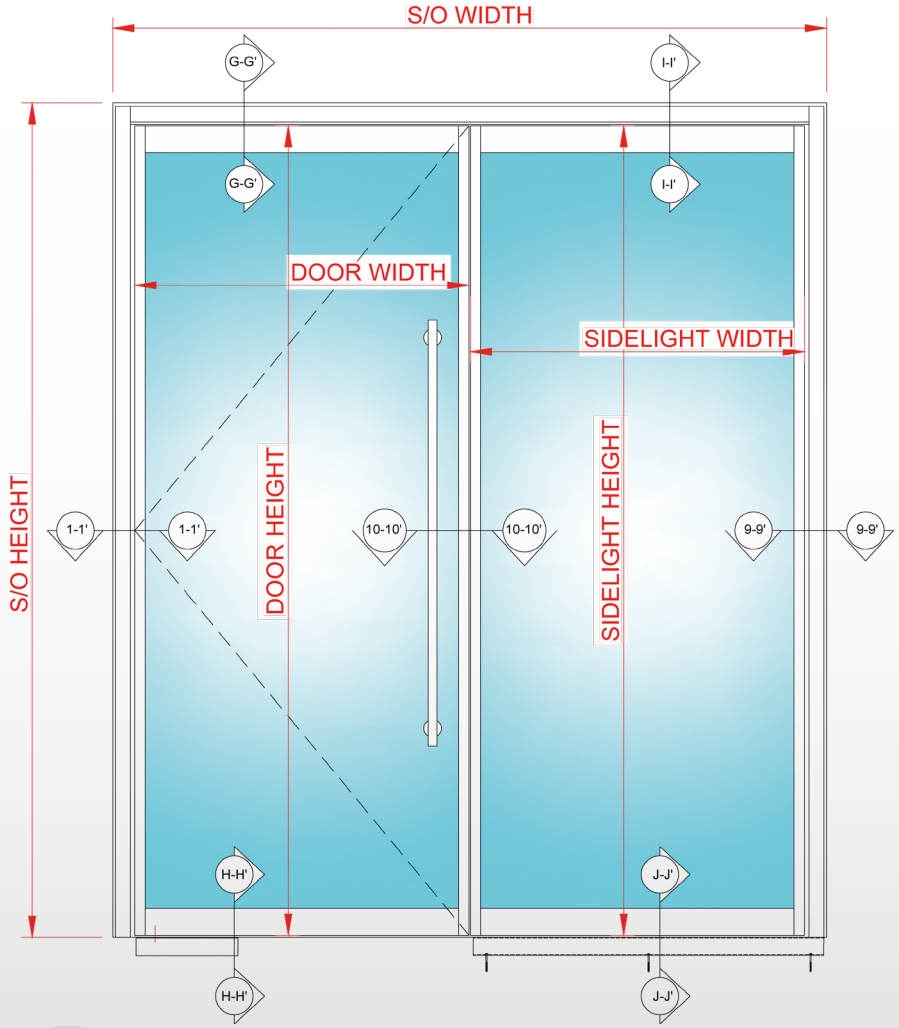

2

- 2392(w) x 2837(h) mm
- 2184(w) x 3117(h) mm

PYROSTYLE INTEGRITY E60 TYPE C DOOR MAXIMUM SIZES

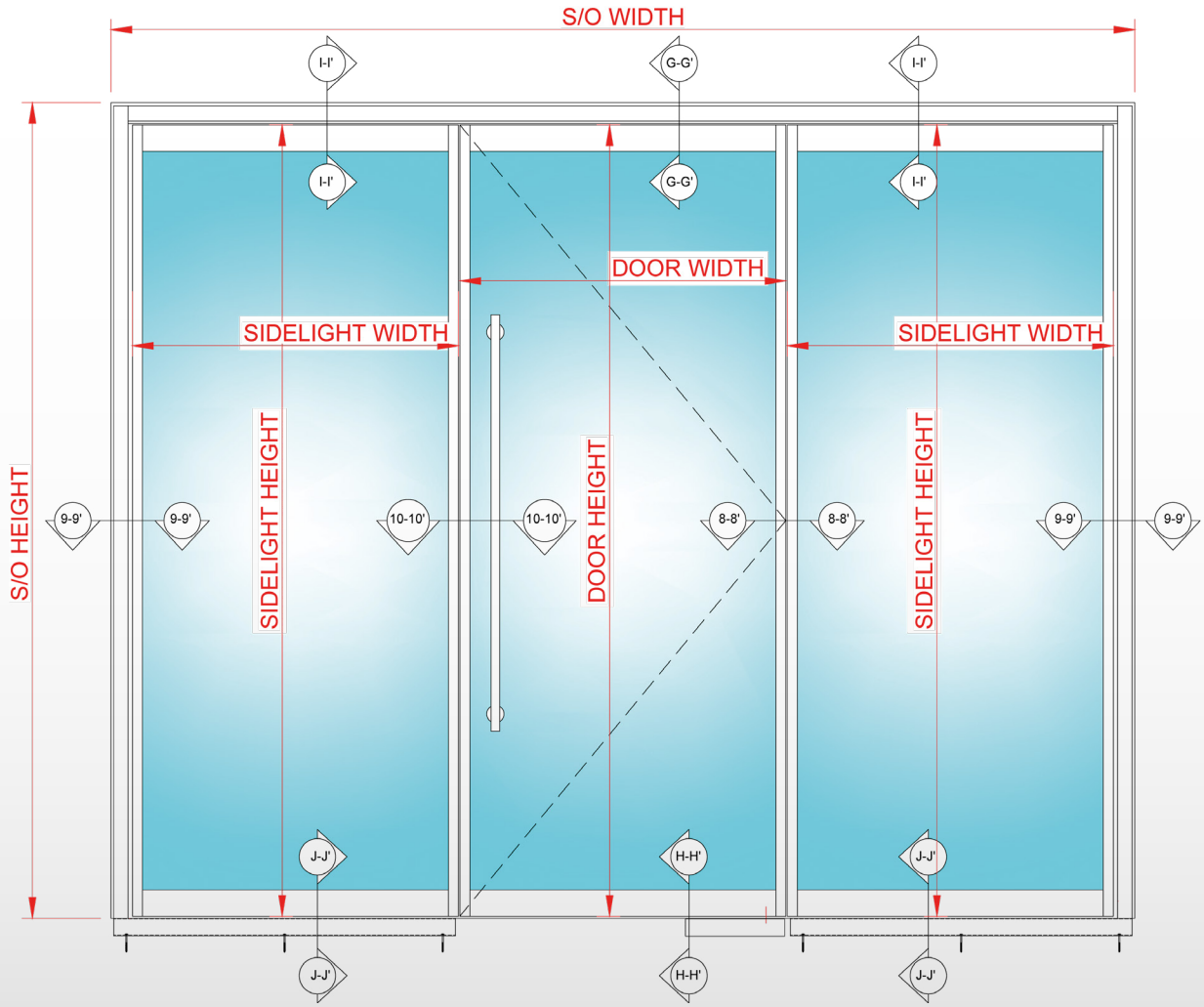

3

- 3528(w) x 2837(h) mm
- 3216(w) x 3117(h) mm

PYROSTYLE INTEGRITY E60 TYPE C DOOR MAXIMUM SIZES

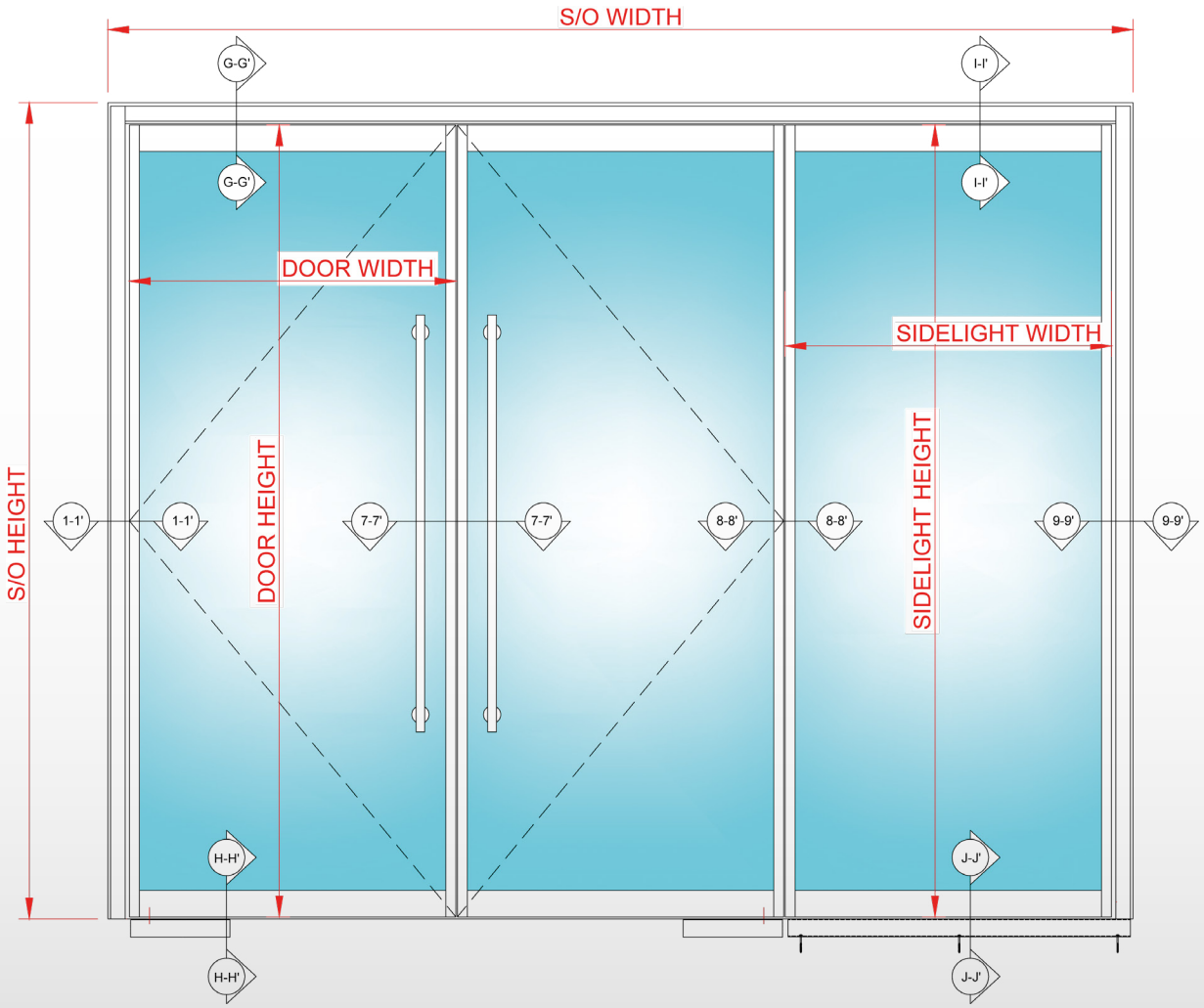

4

- 3132(w) x 2832(h) mm
- 2850(w) x 3117(h) mm

PYROSTYLE INTEGRITY E60 TYPE C DOOR MAXIMUM SIZES

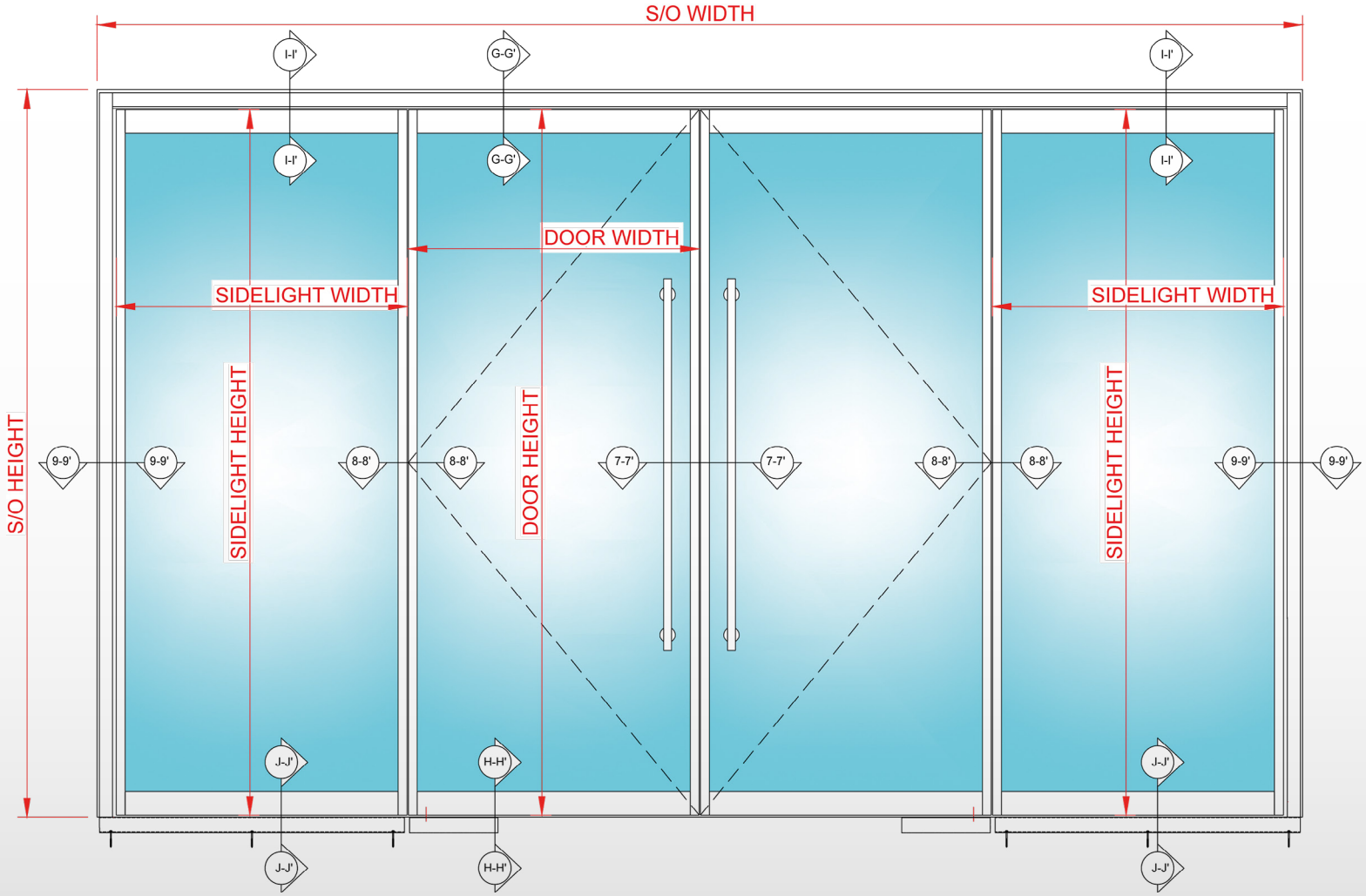

5

- · 4136(w) x 2832(h) mm
- · 3760(w) x 3117(h) mm

PYROSTYLE INTEGRITY E60 TYPE C DOOR SECTION SPECIFICS

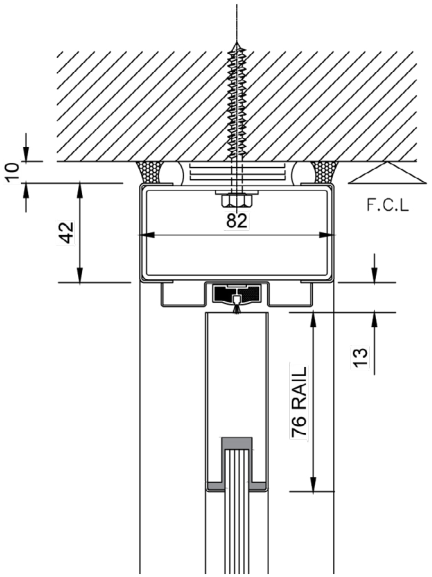

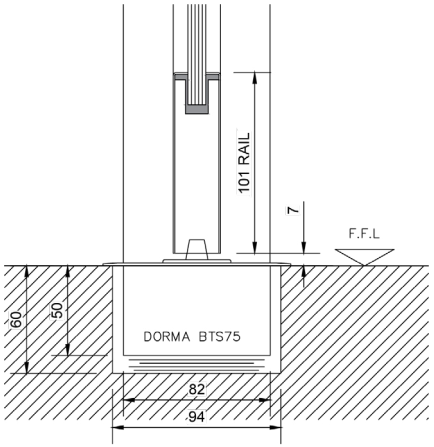

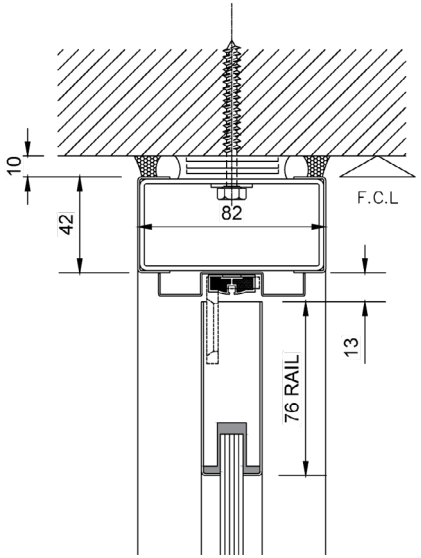

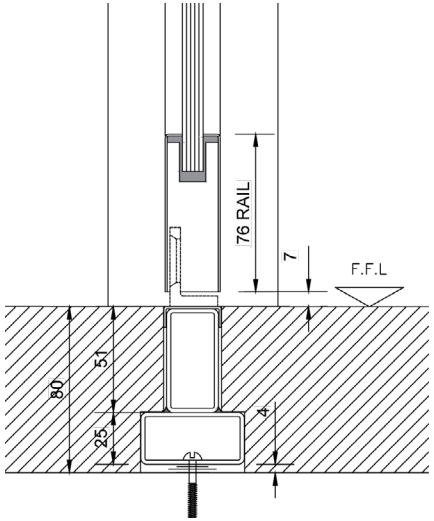

1 Section G-G'

2 Section H-H'

3 Section I-I'

4 Section J-J'

PYROSTYLE INTEGRITY E60 TYPE C DOOR SECTION SPECIFICS

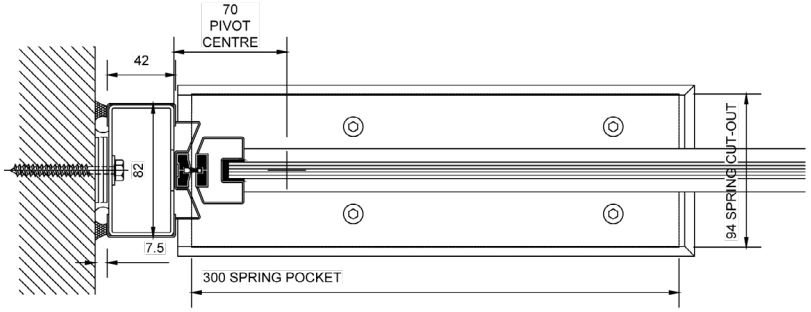

5 Section 1-1′

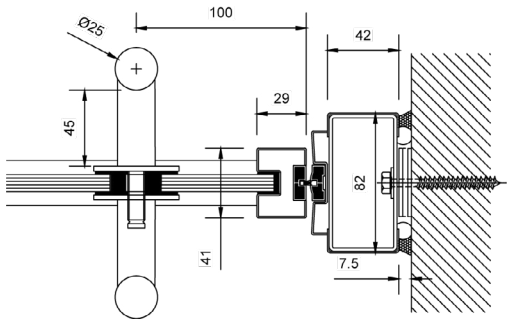

6 Section 2-2′

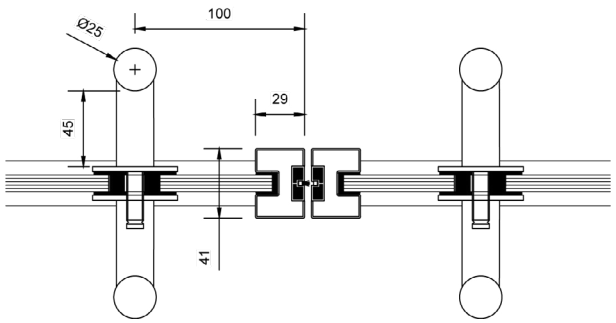

7 Section 7-7′

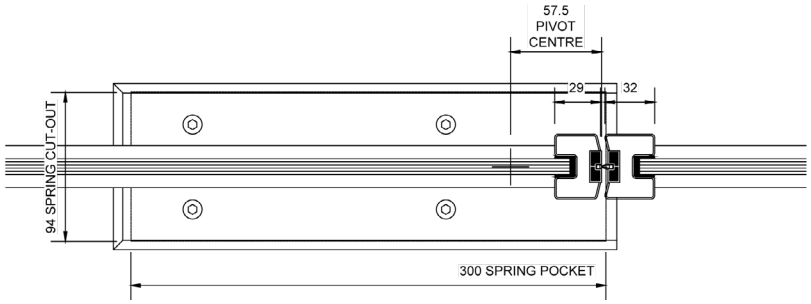

8 Section 8-8′

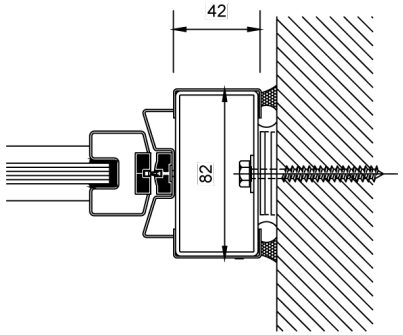

9 Section 9-9′

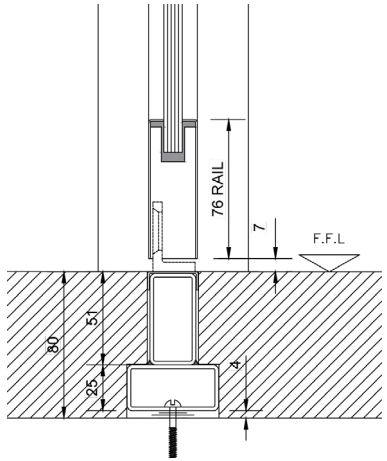

10 Section 10-10′

PYROSTYLE INTEGRITY DOOR AND SCREEN CONFIGURATIONS

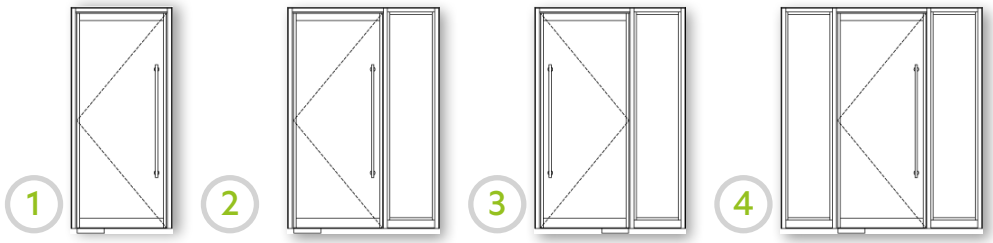

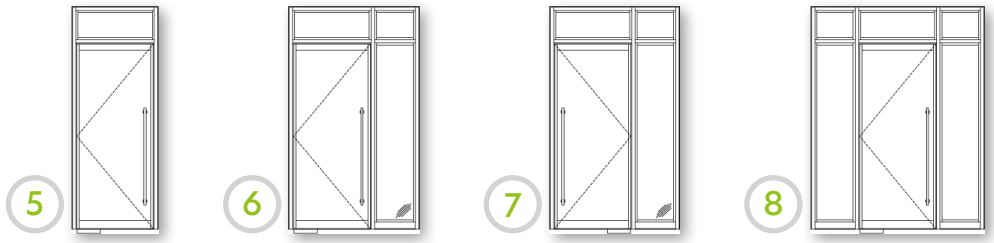

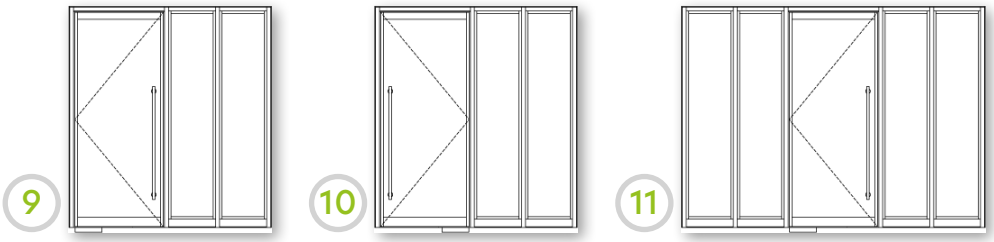

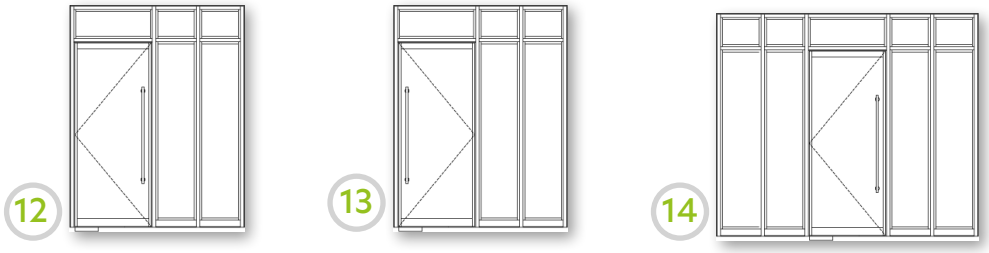

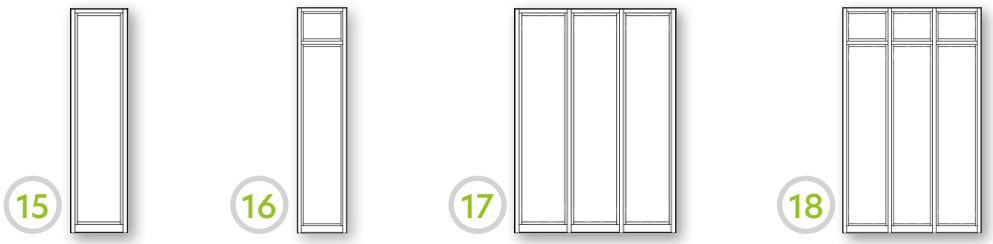

PYROSTYLE INTEGRITY DOOR AND SCREEN CONFIGURATIONS

19

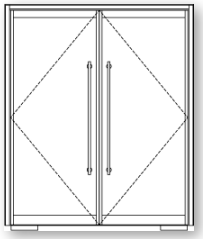

20

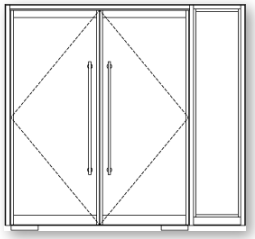

21

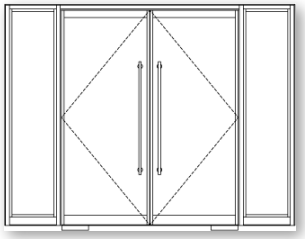

22

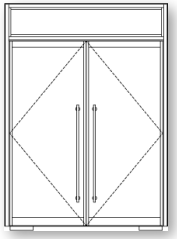

23

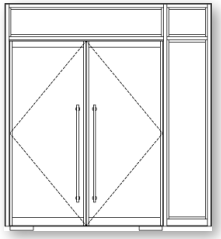

24

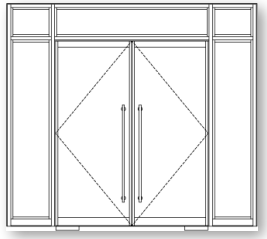

25

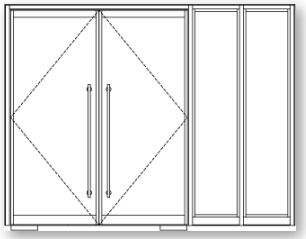

26

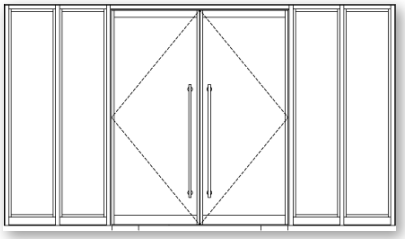

27

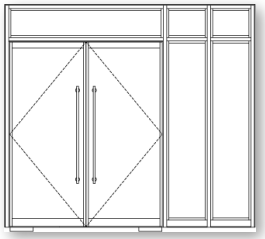

28

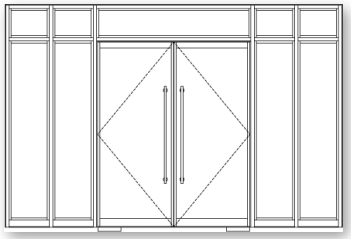

PYROSTYLE INTEGRITY SINGLE DOOR AND SCREEN MAXIMUM SIZES

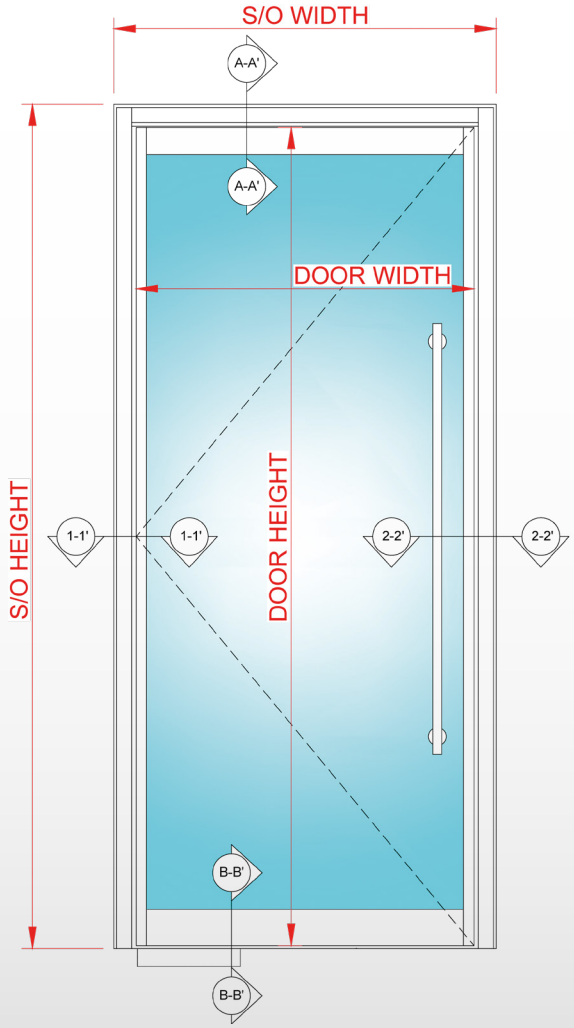

1

- 1256(w) x 2837(h) mm
- 1152(w) x 3117(h) mm

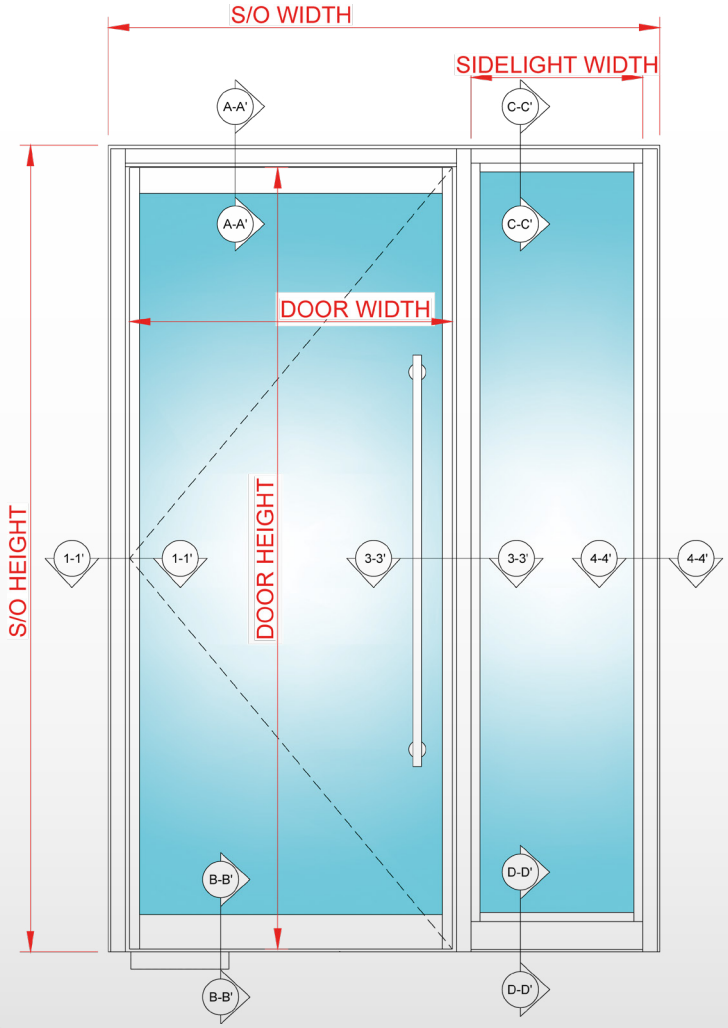

2

- 2308*(w) x 2837(h) mm
- 1864*(w) x 3117(h) mm

* Additional sidelights can be added to suit max. of 6m frame width

PYROSTYLE INTEGRITY SINGLE DOOR AND SCREEN MAXIMUM SIZES

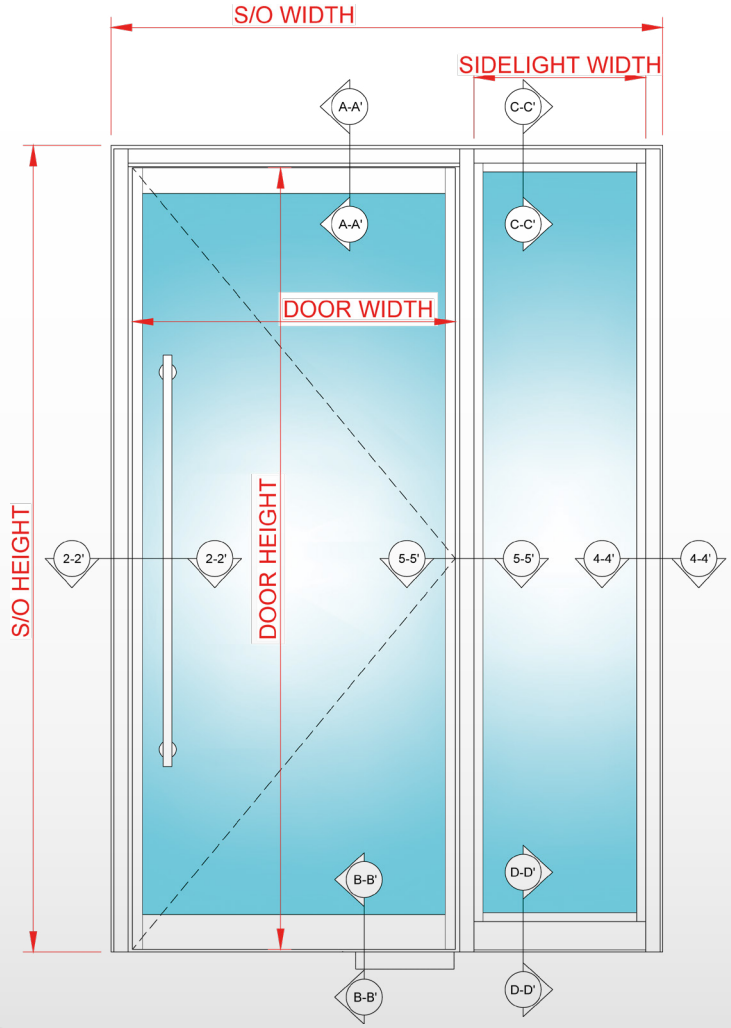

3

- 2308*(w) x 2837(h) mm
- 1864*(w) x 3117(h) mm

* Additional sidelights can be added to suit max. of 6m frame width

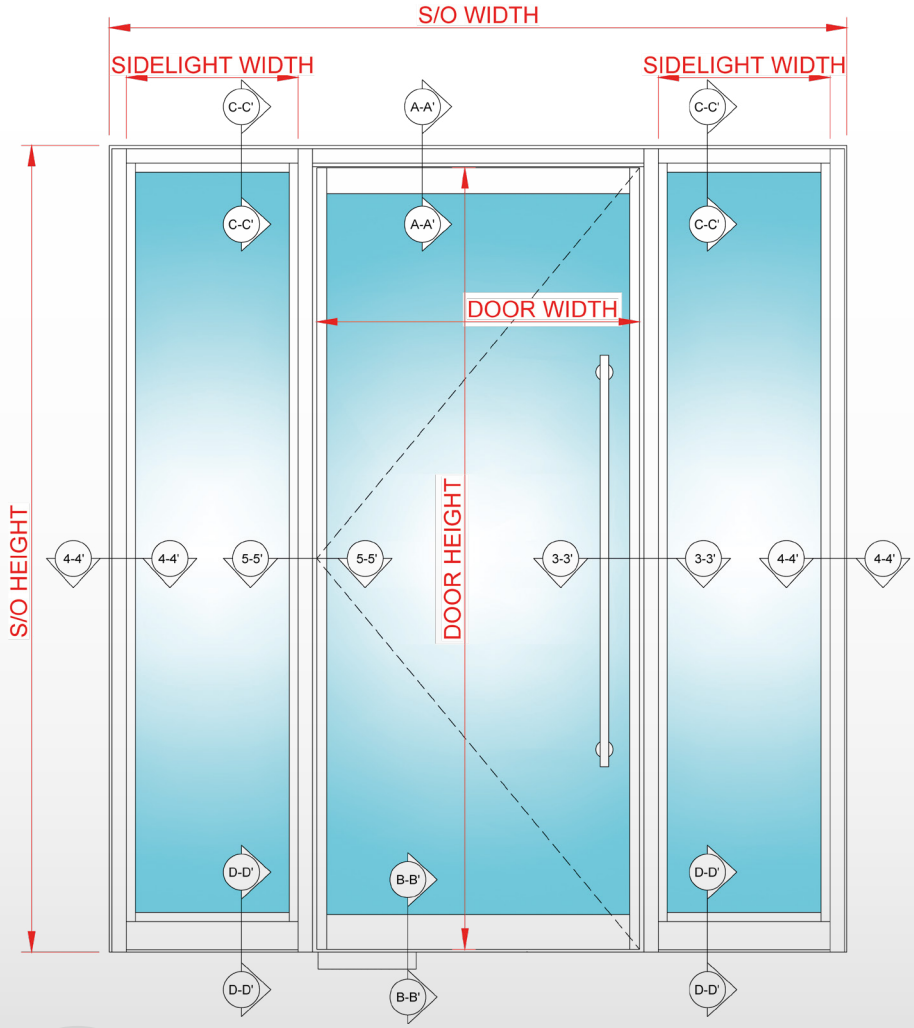

4

- 3360*(w) x 2837(h) mm
- 2576*(w) x 3117(h) mm

*Additional sidelights can be added to suit max. of 6m frame width

PYROSTYLE INTEGRITY SINGLE DOOR AND SCREEN MAXIMUM SIZES

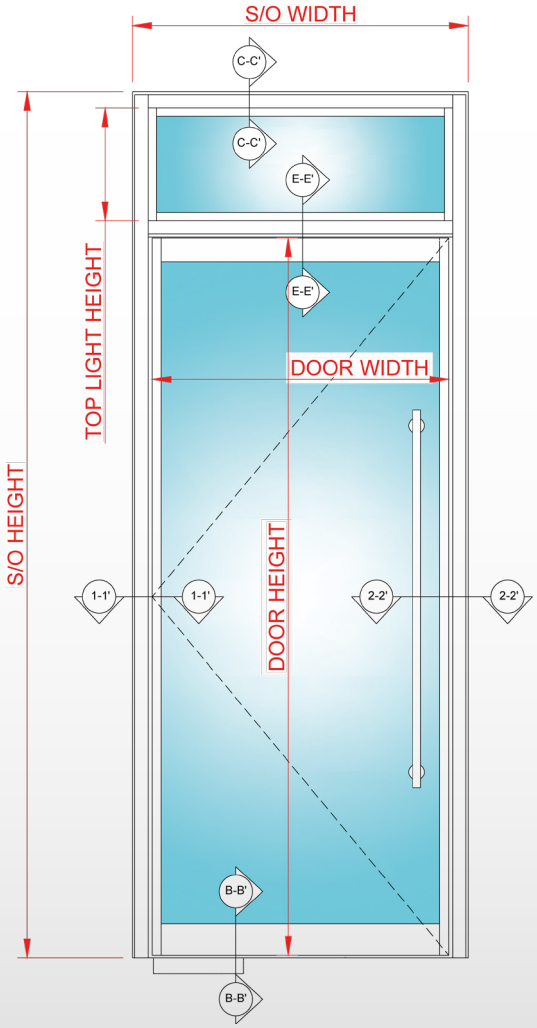

5

E30 Max S/O size: 1256(w) x 3624(h) mm

E60 Max S/O size: 1256(w) x 3029(h) mm

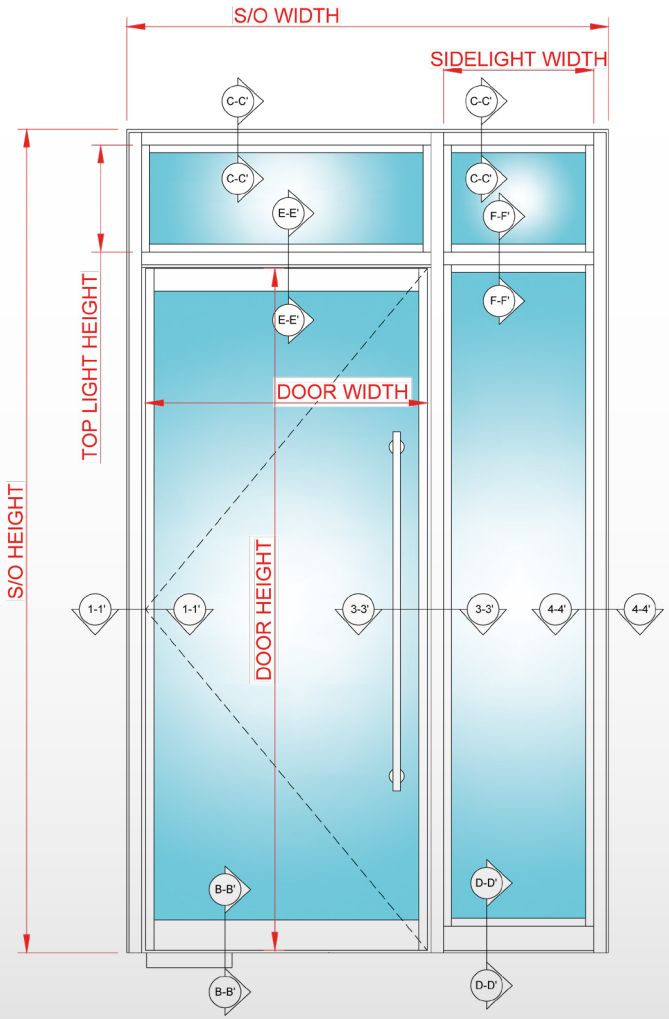

6

E30 Max S/O size: 2308*(w) x 3624(h) mm
E60 Max S/O size: 2308*(w) x 3029(h) mm

*Additional sidelights can be added to suit max. of 6m frame width

PYROSTYLE INTEGRITY SINGLE DOOR AND SCREEN MAXIMUM SIZES

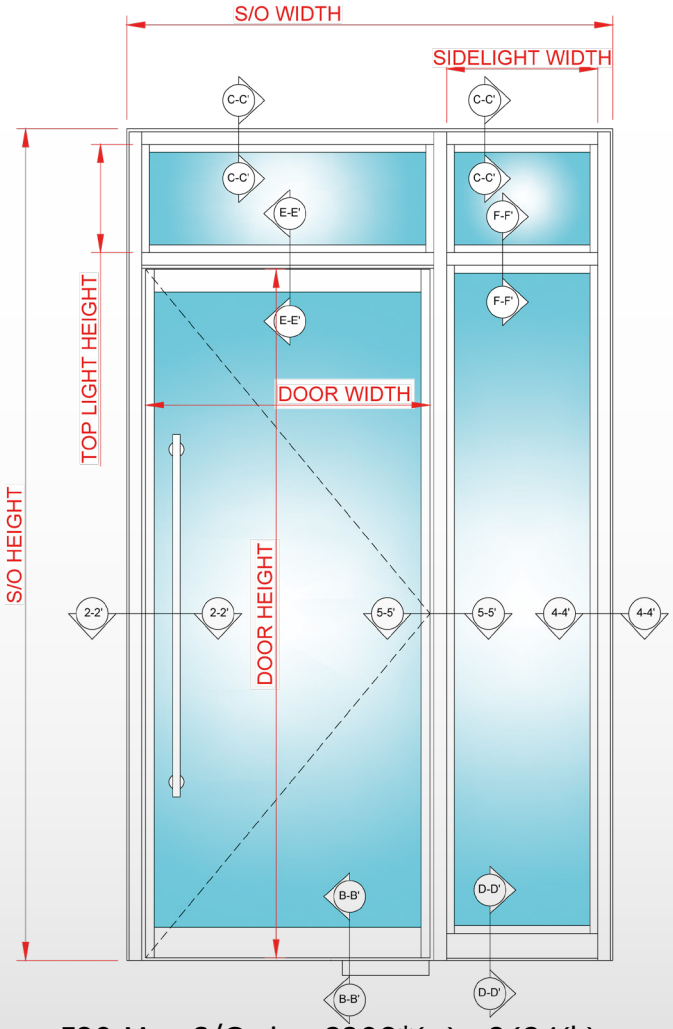

7

E30 Max S/O size: 2308*(w) x 3624(h) mm
E60 Max S/O size: 2308*(w) x 3029(h) mm

*Additional sidelights can be added to suit max. of 6m frame width

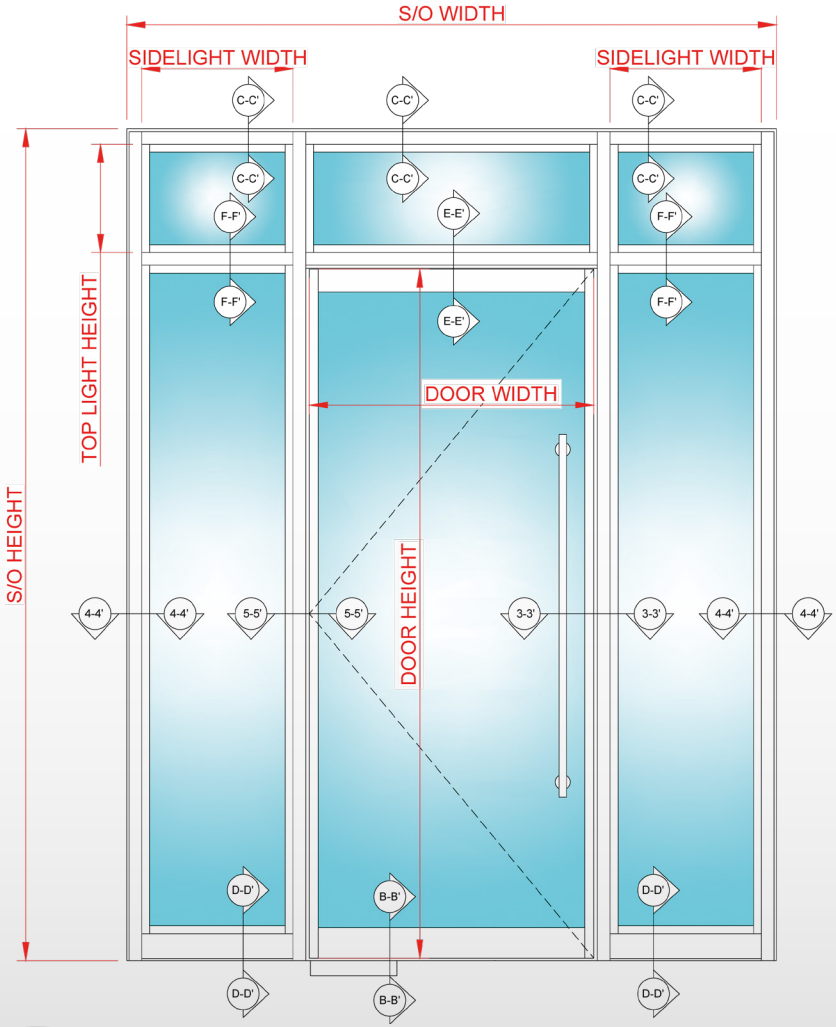

8

E30 Max S/O size: 3360*(w) x 3624(h) mm
E60 Max S/O size: 3360*(w) x 3029(h) mm

*Additional sidelights can be added to suit max. of 6m frame width

PYROSTYLE INTEGRITY SINGLE DOOR AND SCREEN MAXIMUM SIZES

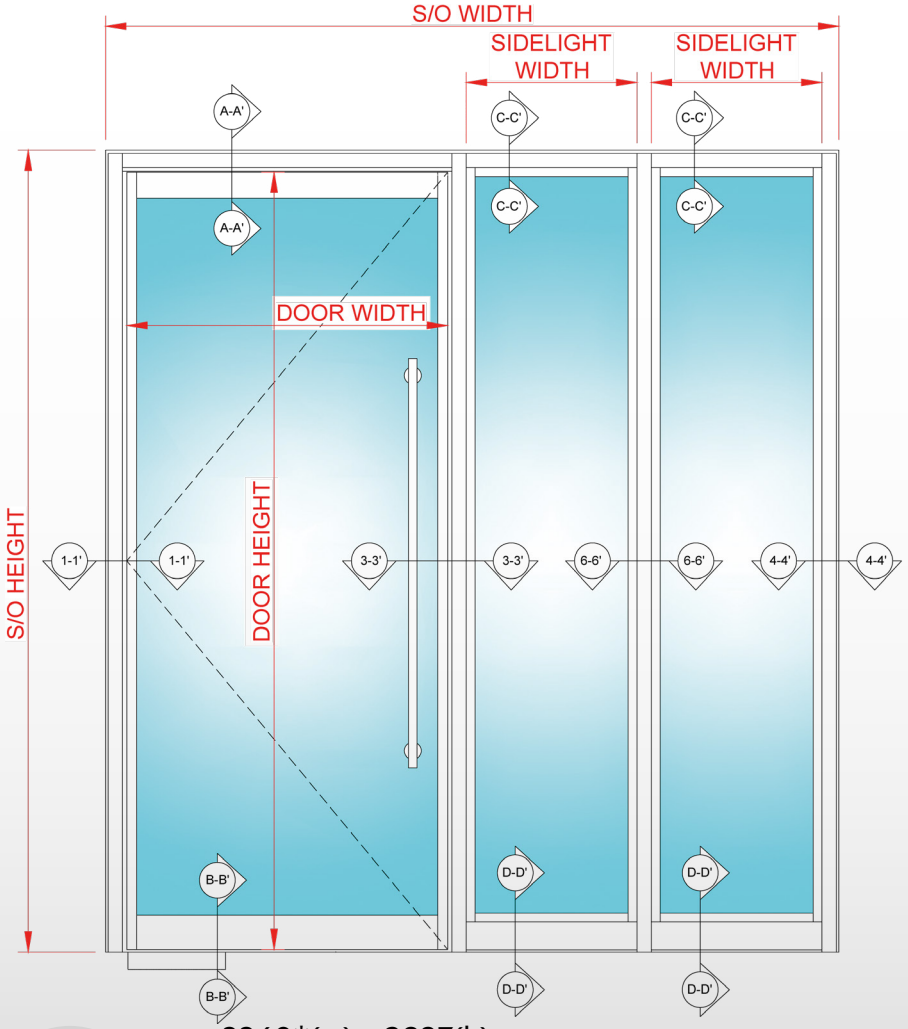

9

- 3360*(w) x 2837(h) mm
- 2576*(w) x 3117(h) mm

*Additional sidelights can be added to suit max. of 6m frame width

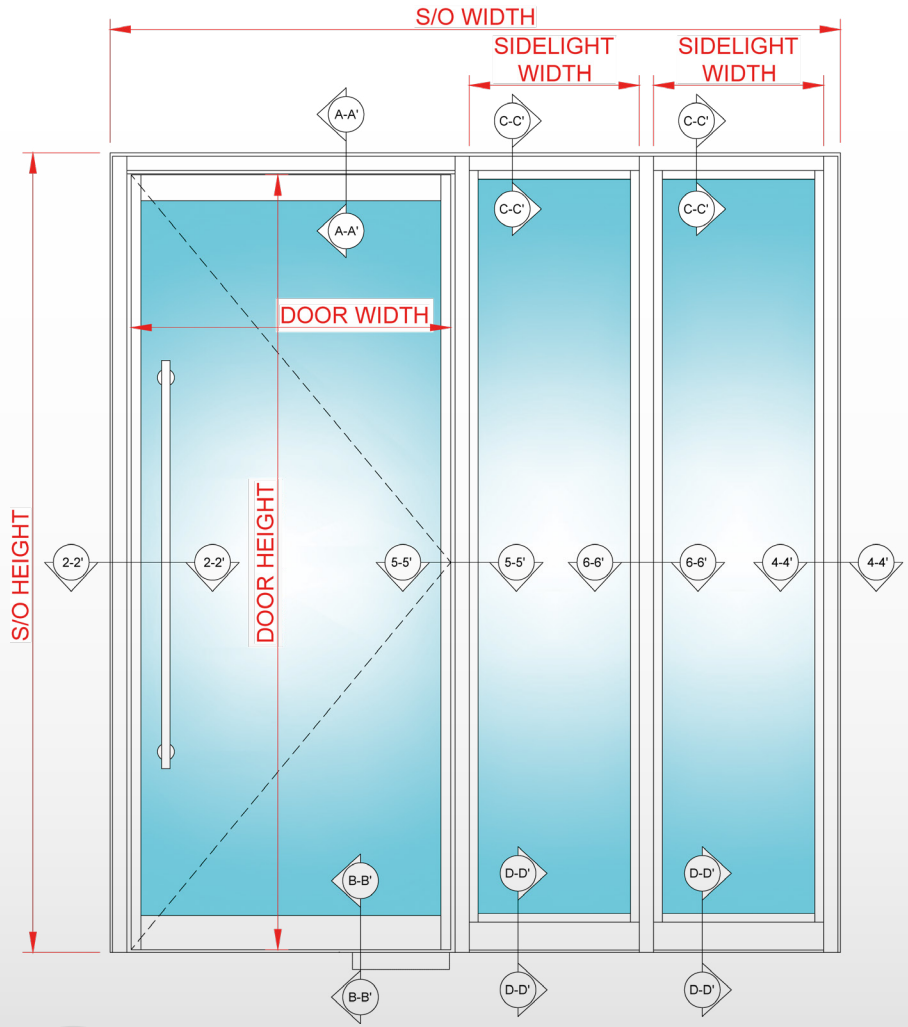

10

- 3360*(w) x 2837(h) mm
- 2576*(w) x 3117(h) mm

*Additional sidelights can be added to suit max. of 6m frame width

PYROSTYLE INTEGRITY SINGLE DOOR AND SCREEN MAXIMUM SIZES

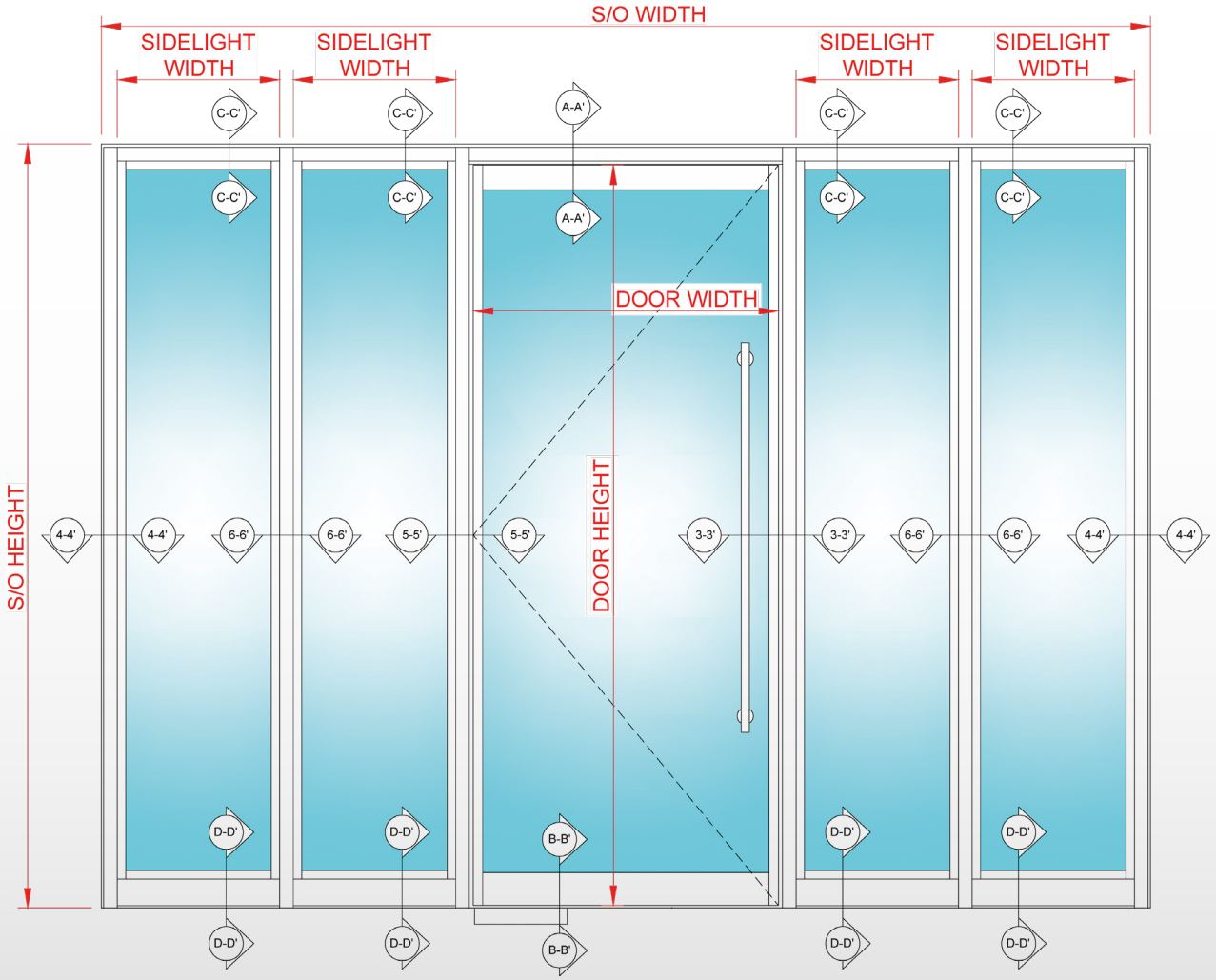

11

- 5464*(w) x 2837(h) mm
- 4000*(w) x 3117(h) mm

*Additional sidelights can be added to suit max. of 6m frame width

PYROSTYLE INTEGRITY SINGLE DOOR AND SCREEN MAXIMUM SIZES

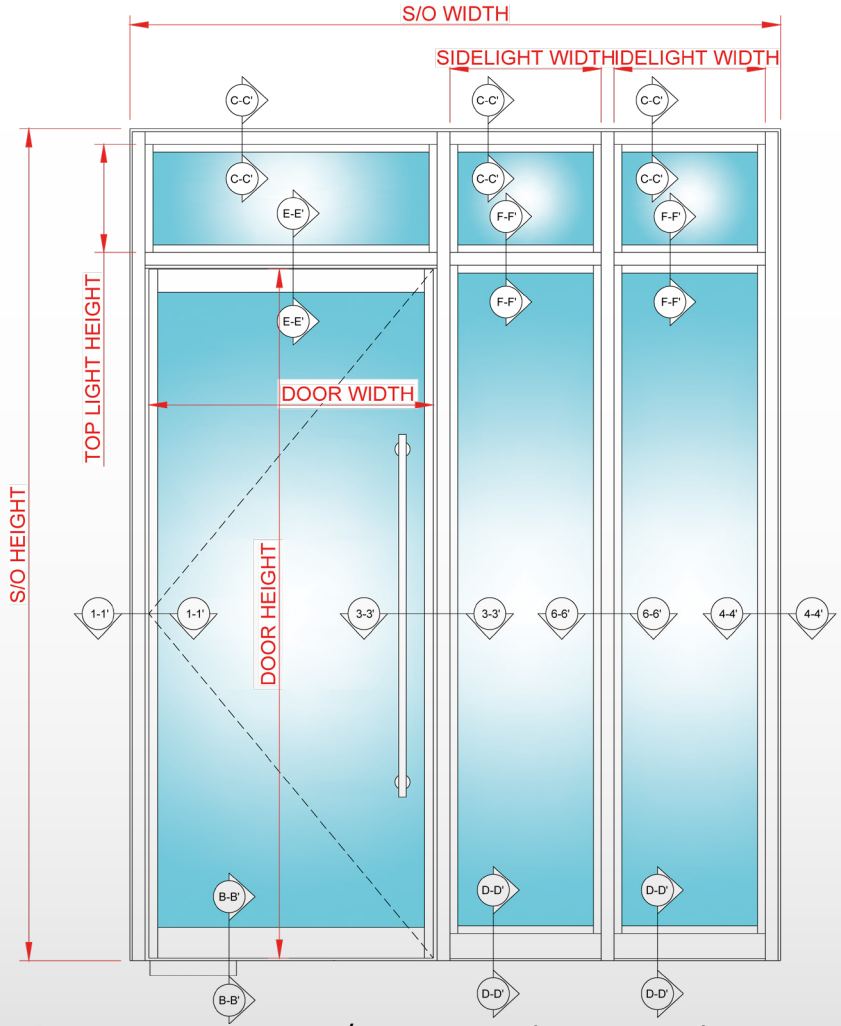

12

- E30 Max S/O size: 3360*(w) x 3624(h) mm
- E60 Max S/O size: 3360*(w) x 3029(h) mm

*Additional sidelights can be added to suit max. of 6m frame width

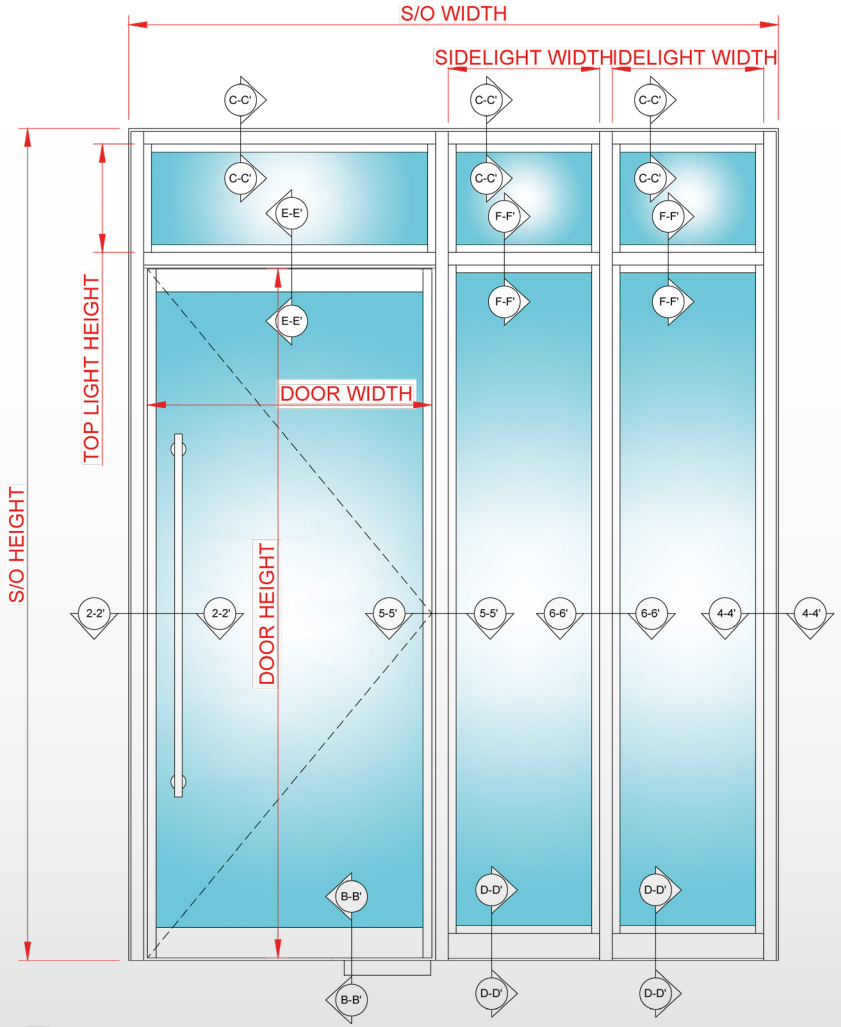

13

- E30 Max S/O size: 3360*(w) x 3624(h) mm
- E60 Max S/O size: 3360*(w) x 3029(h) mm

*Additional sidelights can be added to suit max. of 6m frame width

PYROSTYLE INTEGRITY SINGLE DOOR AND SCREEN MAXIMUM SIZES

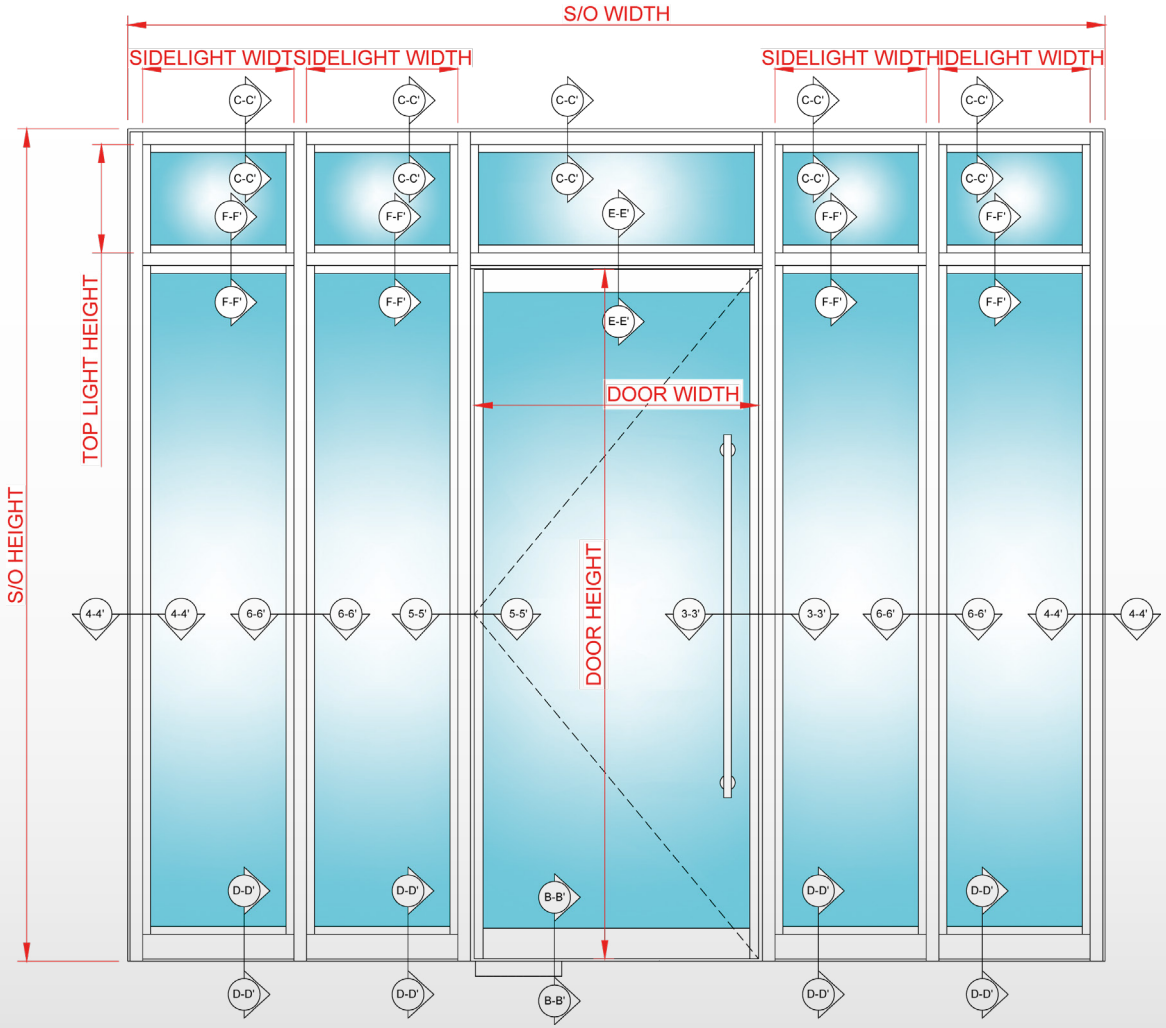

14

E30 Max S/O size: 5464*(w) x 3624(h) mm
E60 Max S/O size: 5464*(w) x 3029(h) mm

*Additional sidelights can be added
to suit max. of 6m frame width

PYROSTYLE INTEGRITY SCREENS MAXIMUM SIZES

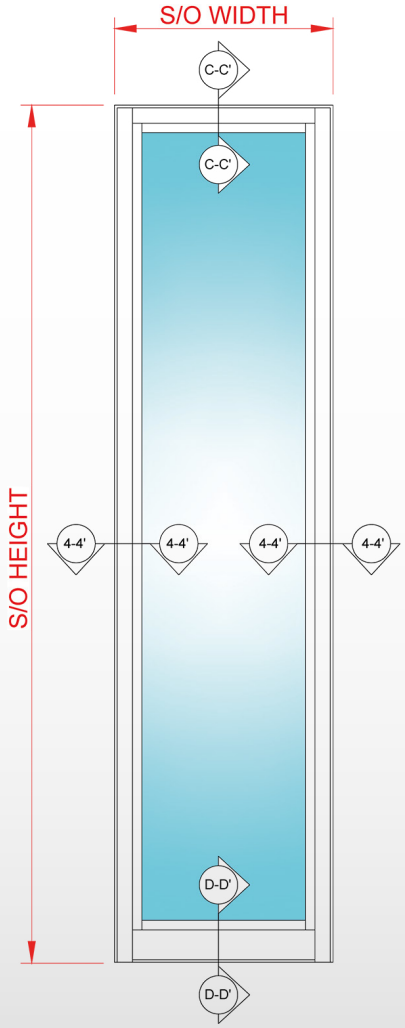

15 SIZES TBC

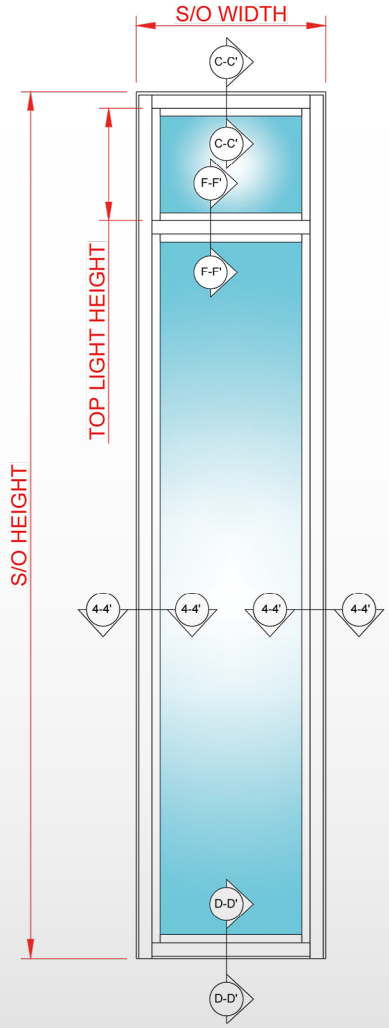

16 SIZES TBC

PYROSTYLE INTEGRITY SCREENS MAXIMUM SIZES

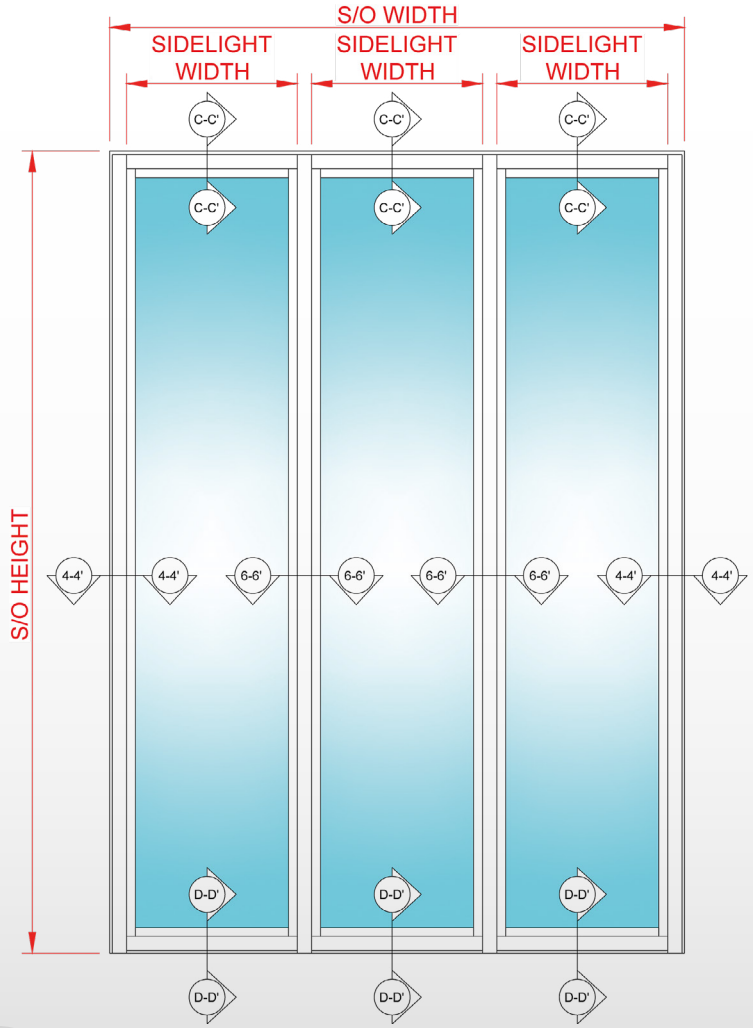

17 SIZES TBC

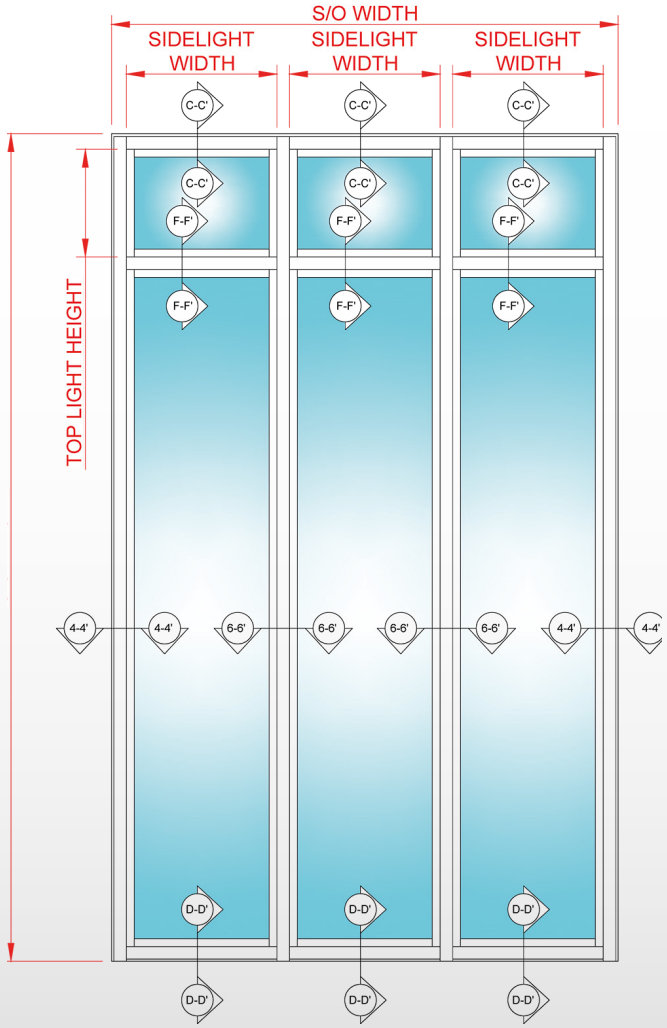

18 SIZES TBC

PYROSTYLE INTEGRITY DOUBLE DOOR AND SCREEN MAXIMUM SIZES

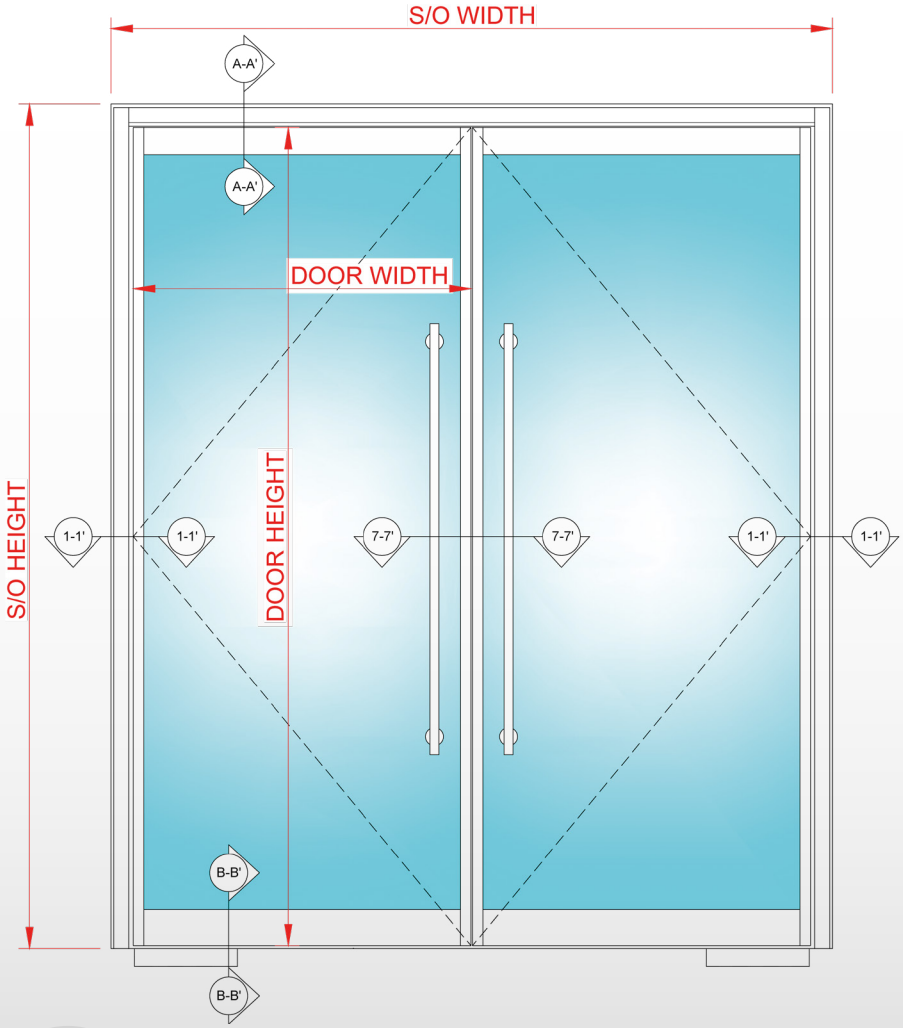

19

- 2128(w) x 2832(h) mm
- 1940(w) x 3117(h) mm

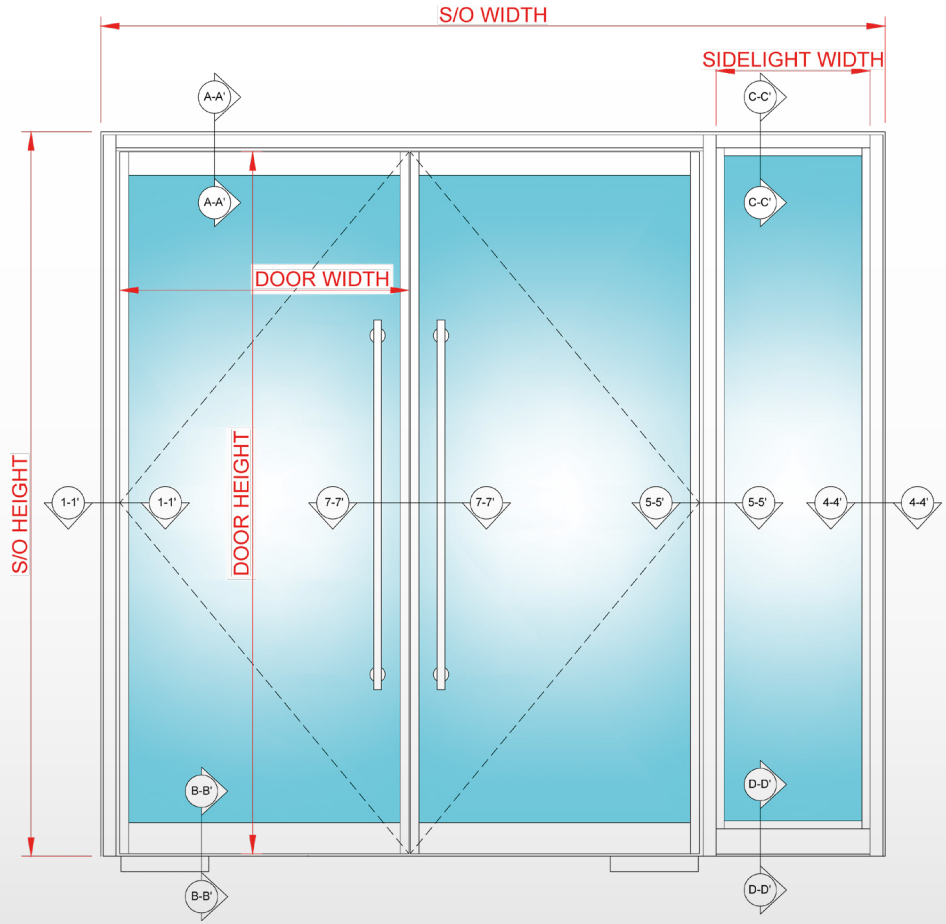

20

- 3180*(w) x 2832(h) mm
- 2652*(w) x 3117(h) mm

*Additional sidelights can be added to suit max. of 6m frame width

PYROSTYLE INTEGRITY DOUBLE DOOR AND SCREEN MAXIMUM SIZES

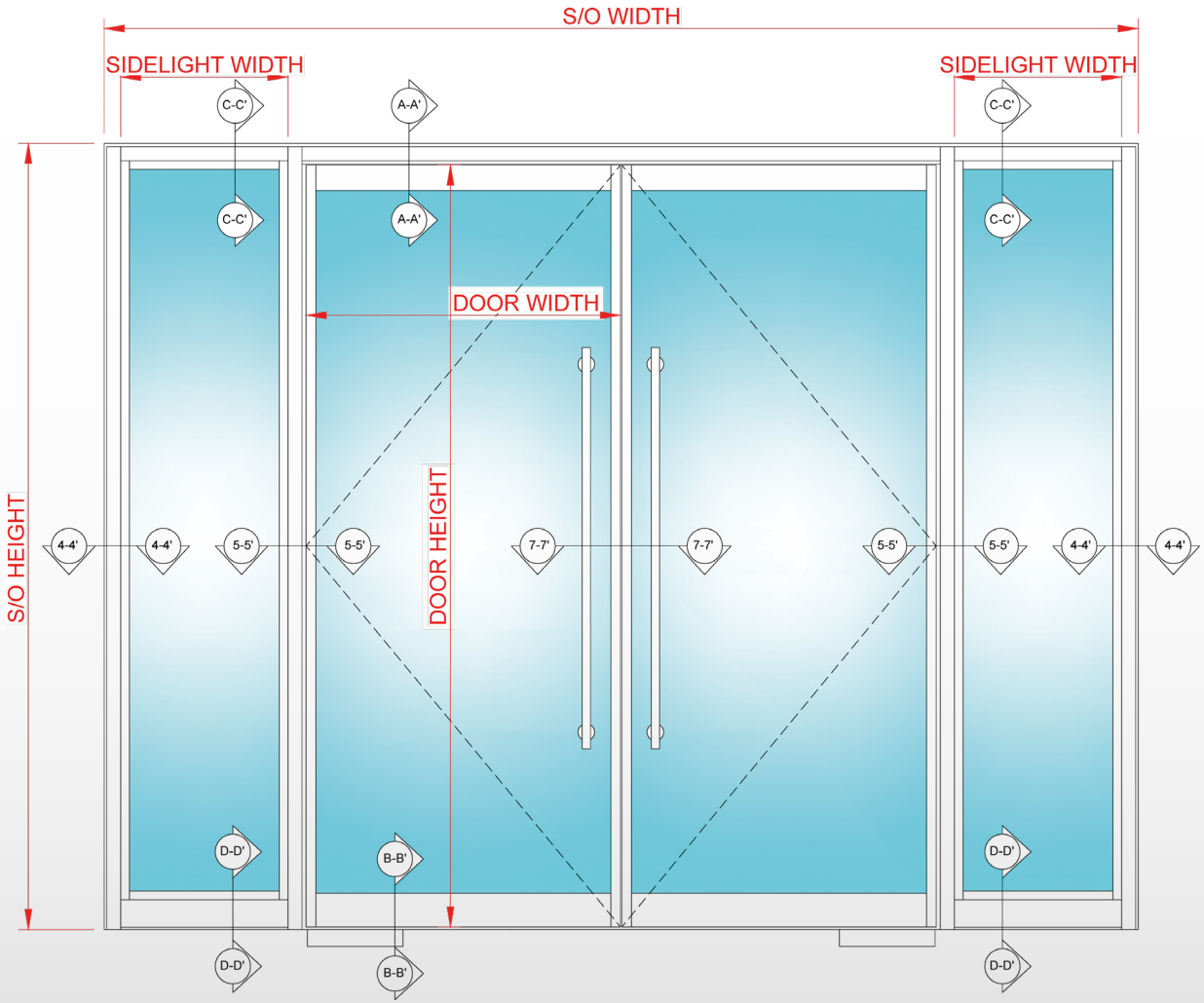

21

- 4232*(w) x 2832(h) mm
- 3364*(w) x 3117(h) mm

*Additional sidelights can be added to suit max. of 6m frame width

PYROSTYLE INTEGRITY DOUBLE DOOR AND SCREEN MAXIMUM SIZES

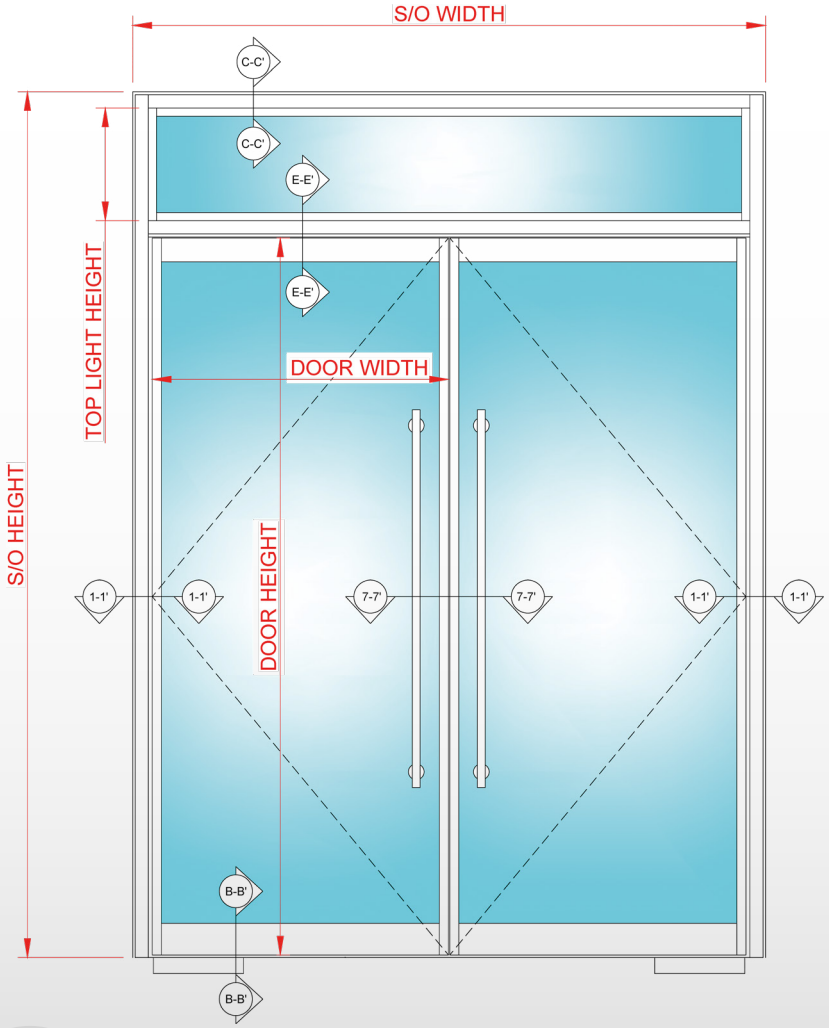

22

E30 Max S/O size: 2128(w) x 3624(h) mm
E60 Max S/O size: 2128(w) x 3029(h) mm

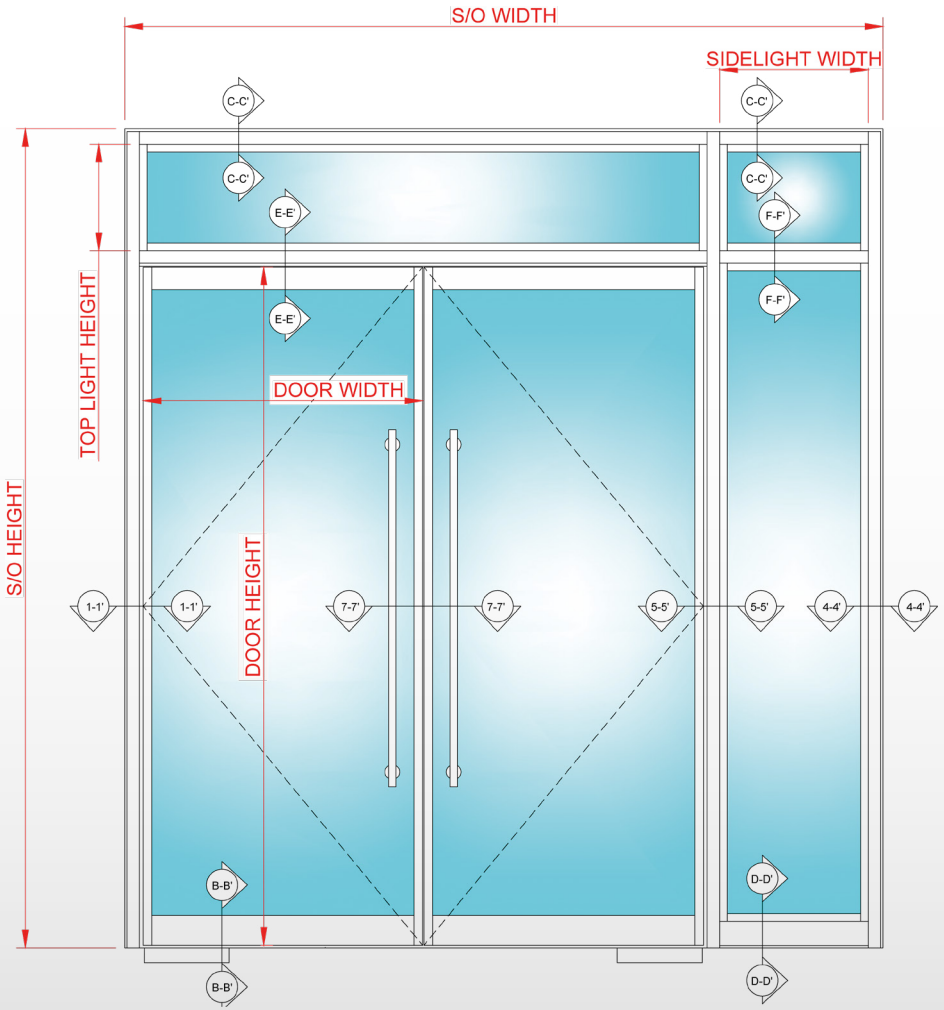

23

- E30 Max S/O size: 3180*(w) x 3624(h) mm
- E60 Max S/O size: 3180*(w) x 3029(h) mm

*Additional sidelights can be added to suit max. of 6m frame width

PYROSTYLE INTEGRITY DOUBLE DOOR AND SCREEN MAXIMUM SIZES

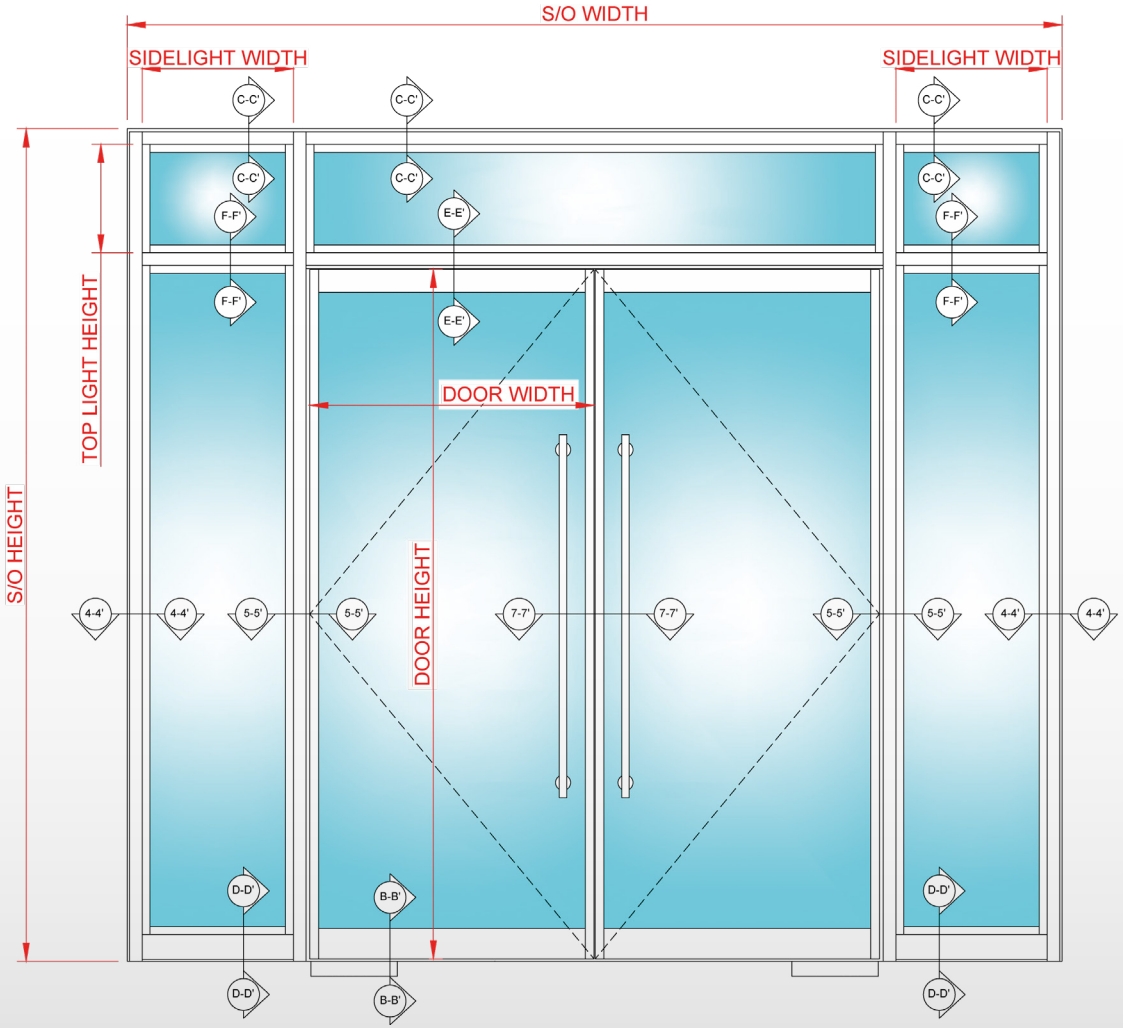

24

- E30 Max S/O size: 4232*(w) x 3624(h) mm
- E60 Max S/O size: 4232*(w) x 3029(h) mm

*Additional sidelights can be added to suit max. of 6m frame width

PYROSTYLE INTEGRITY DOUBLE DOOR AND SCREEN MAXIMUM SIZES

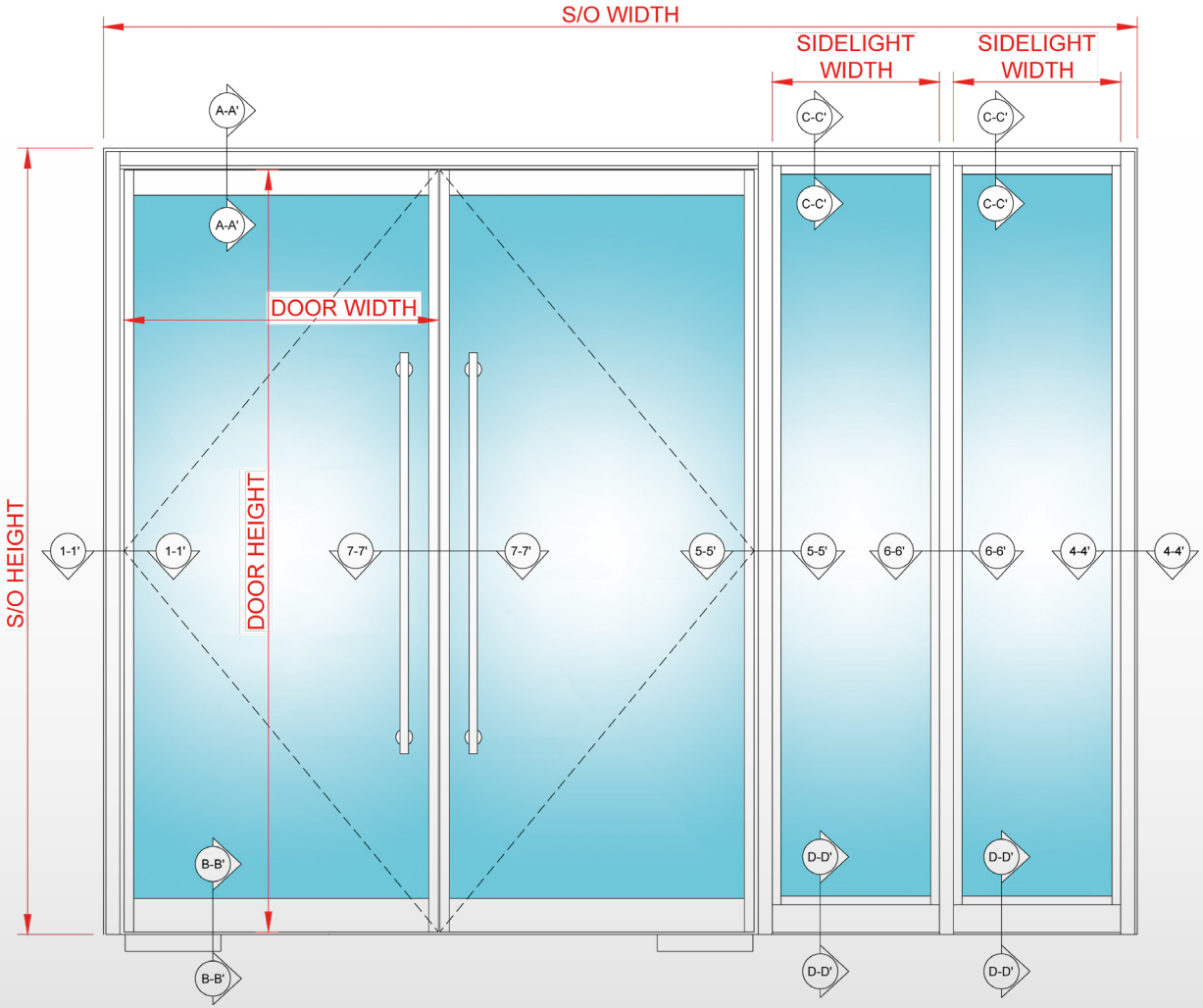

- 4232*(w) x 2832(h) mm
- 3364*(w) x 3117(h) mm

*Additional sidelights can be added to suit max. of 6m frame width

25

PYROSTYLE INTEGRITY DOUBLE DOOR AND SCREEN MAXIMUM SIZES

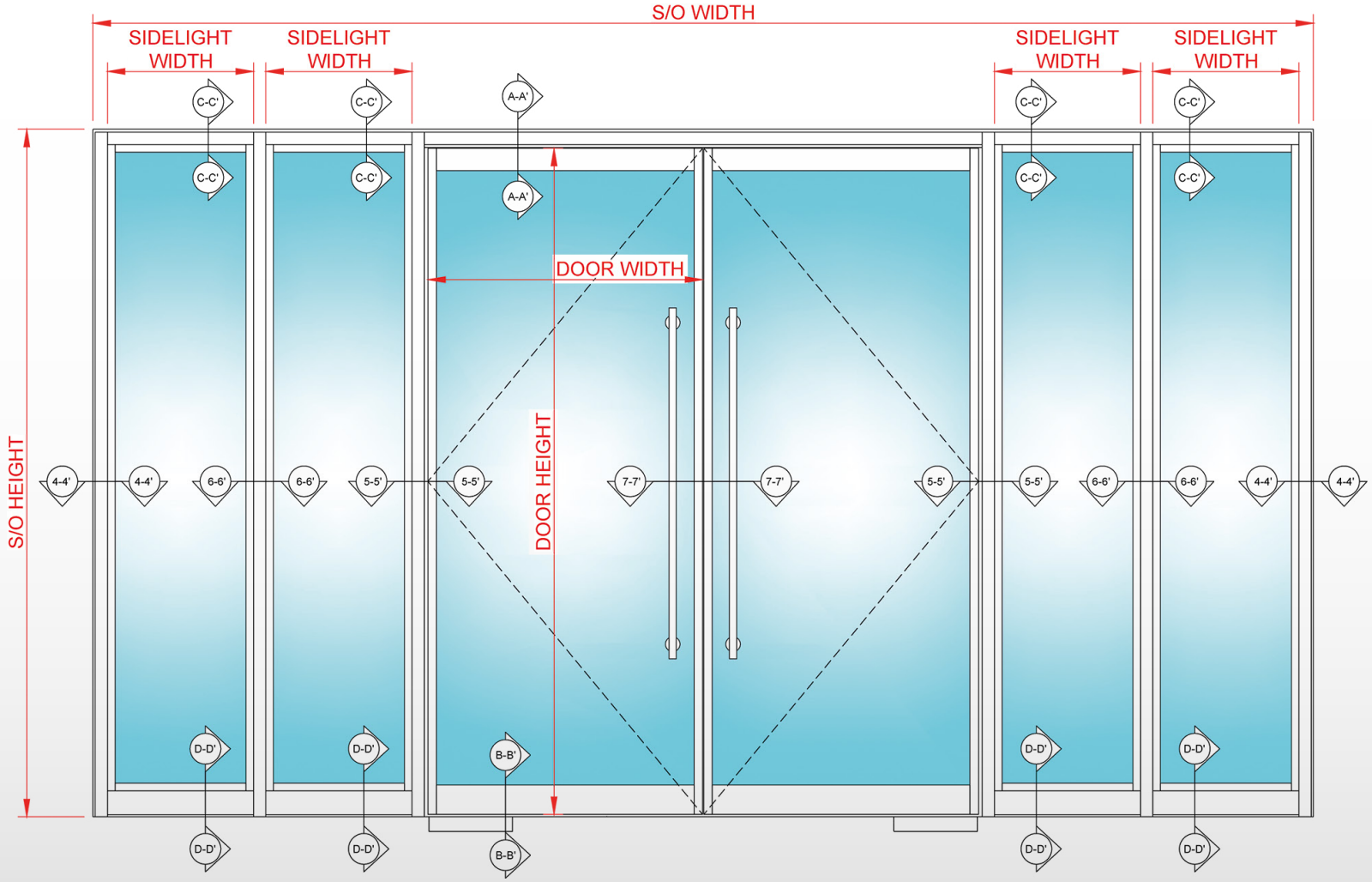

26

- 6015(w) x 2832(h) mm
- 4788*(w) x 3117(h) mm

*Additional sidelights can be added

PYROSTYLE INTEGRITY DOUBLE DOOR AND SCREEN MAXIMUM SIZES

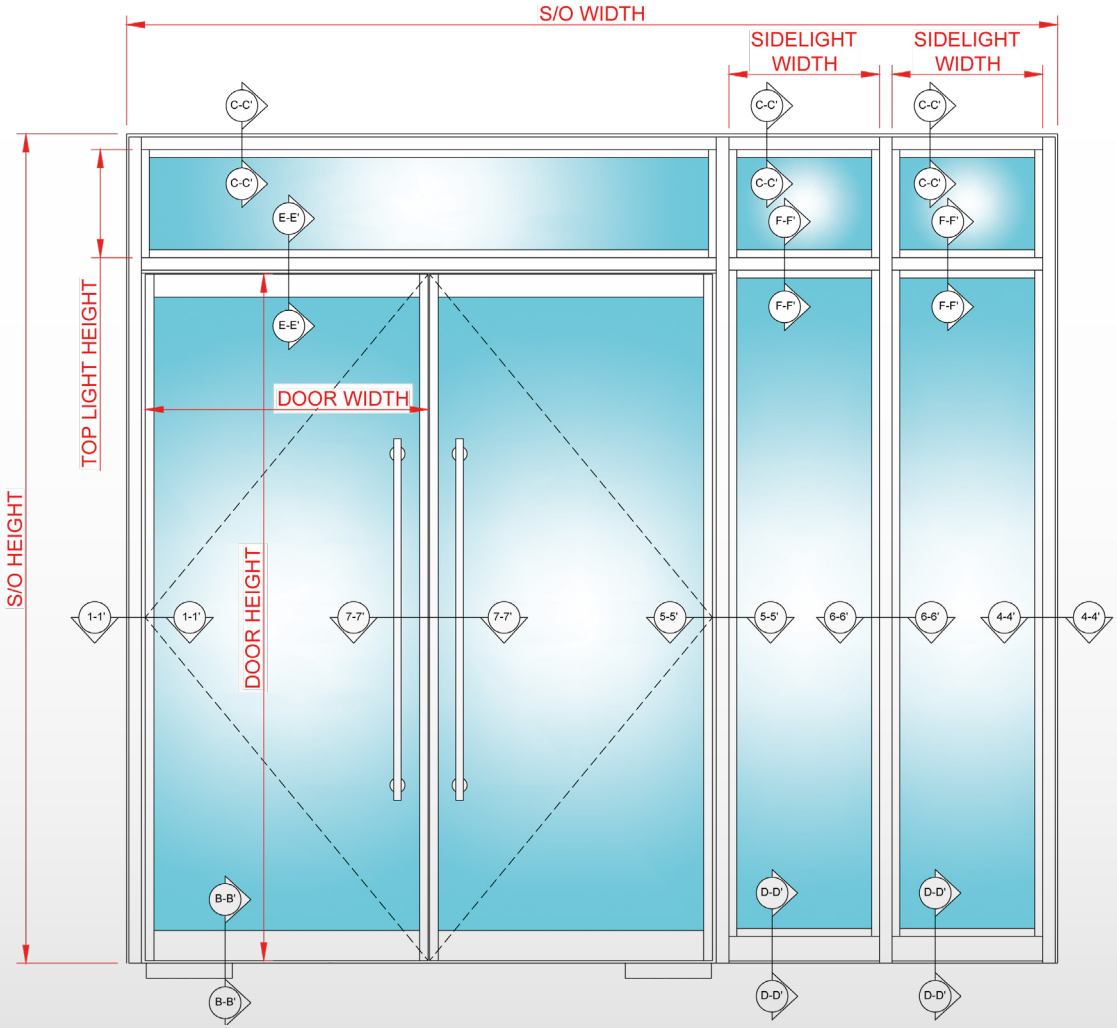

27

- E30 Max S/O size: 4232*(w) x 3624(h) mm
- E60 Max S/O size: · 4232*(w) x 3029(h) mm

*Additional sidelights can be added to suit max. of 6m frame width

PYROSTYLE INTEGRITY DOUBLE DOOR AND SCREEN MAXIMUM SIZES

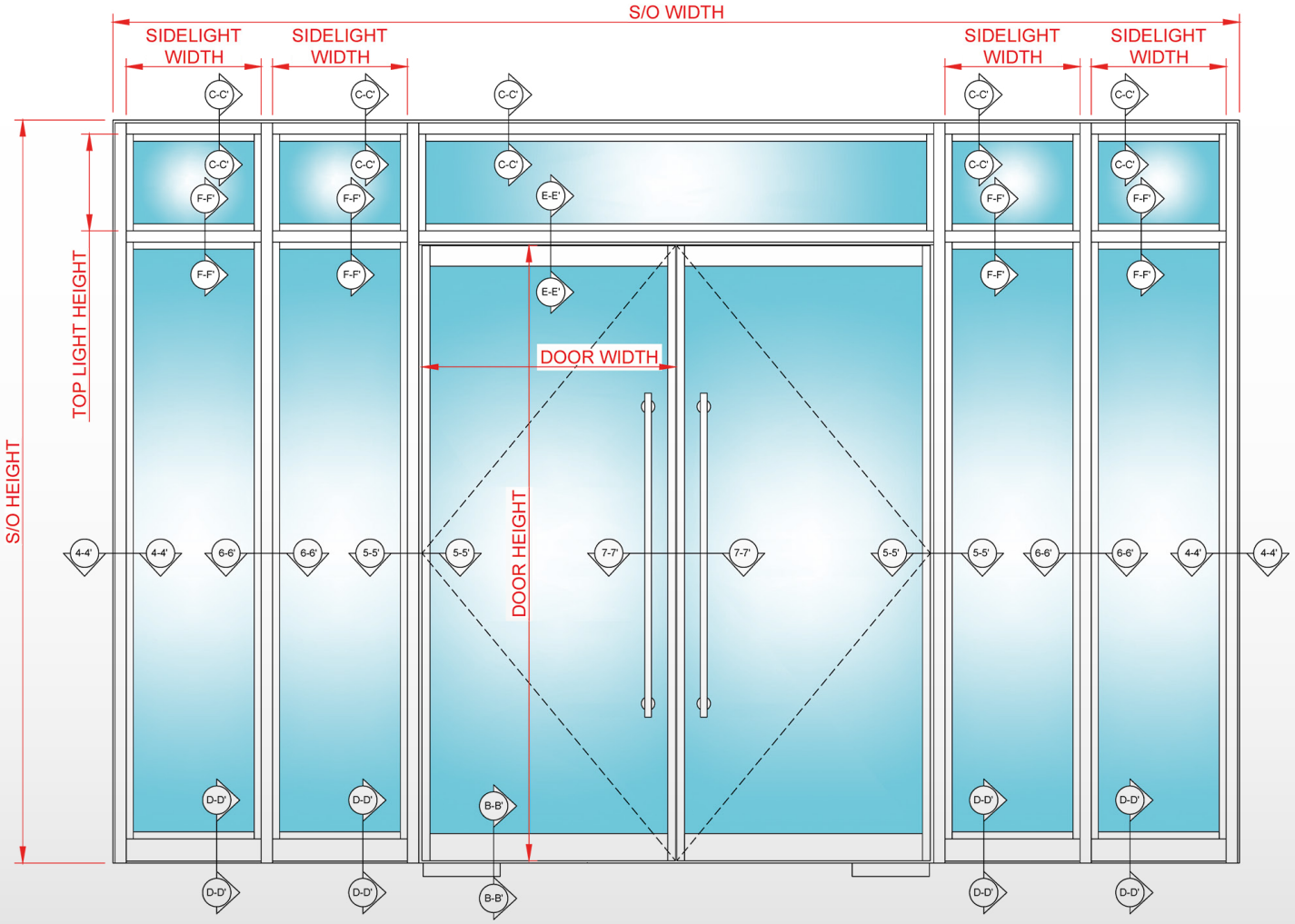

28

- E30 Max S/O size: 6015(w) x 3624(h) mm
- E60 Max S/O size: 6015(w) x 3029(h) mm

PYROSTYLE INTEGRITY DOOR AND SCREENS SECTION SPECIFICS

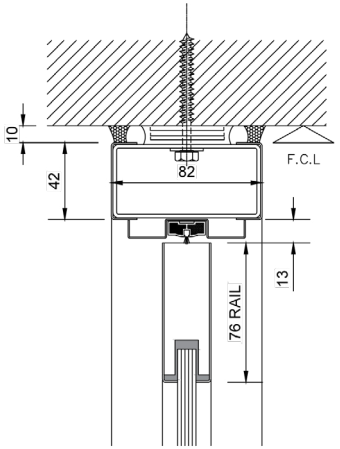

1 Section A-A'

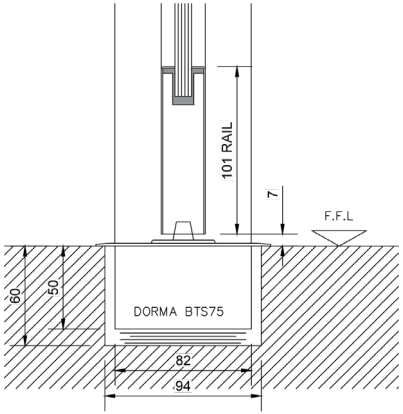

2 Section B-B'

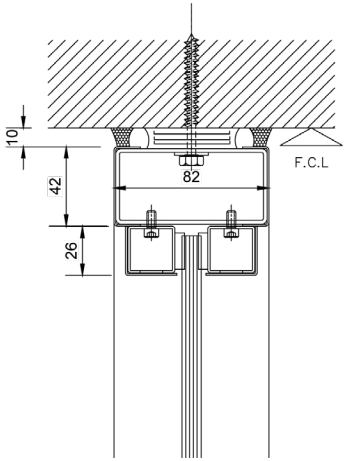

3 Section C-C'

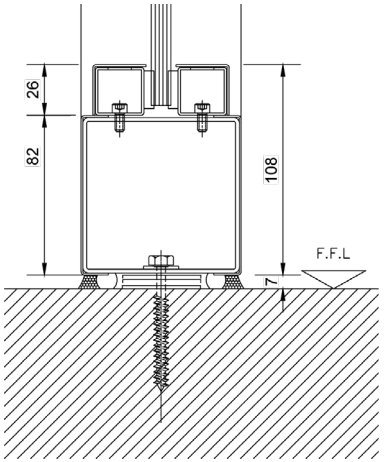

4 Section D-D'

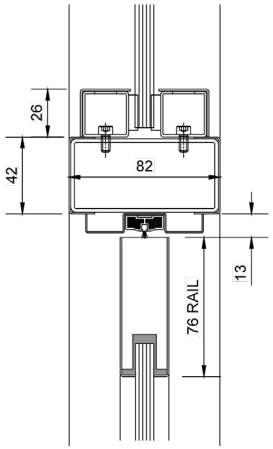

5 Section E-E'

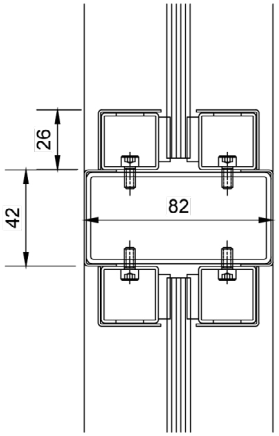

6 Section F-F'

PYROSTYLE INTEGRITY DOOR AND SCREENS SECTION SPECIFICS

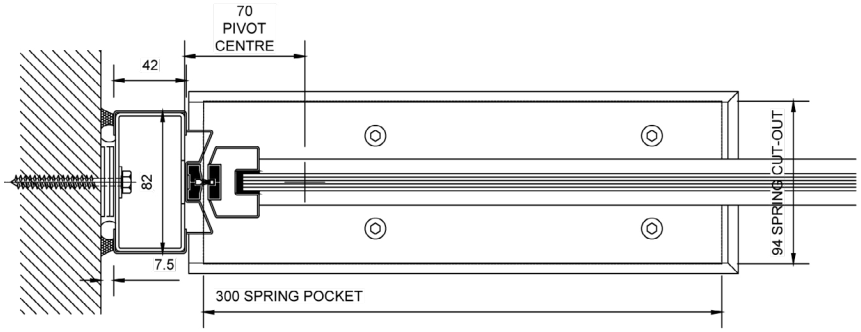

7 Section 1-1′

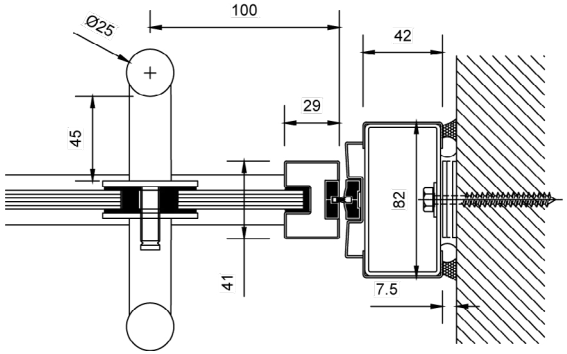

8 Section 2-2′

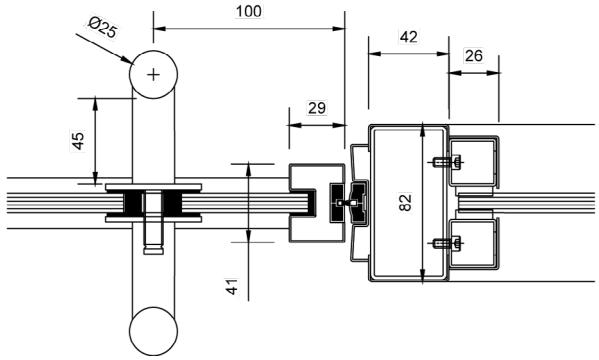

9 Section 3-3′

PYROSTYLE INTEGRITY DOOR AND SCREENS SECTION SPECIFICS

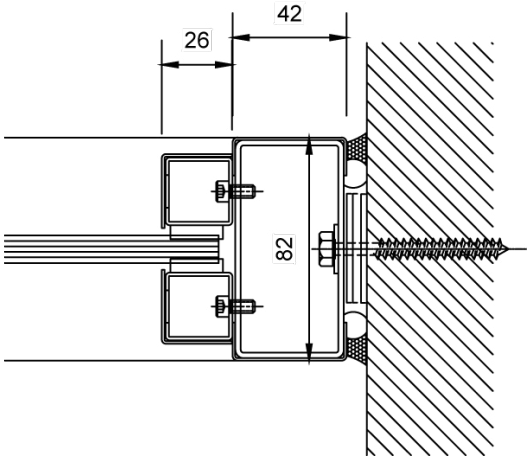

10 Section 4-4′

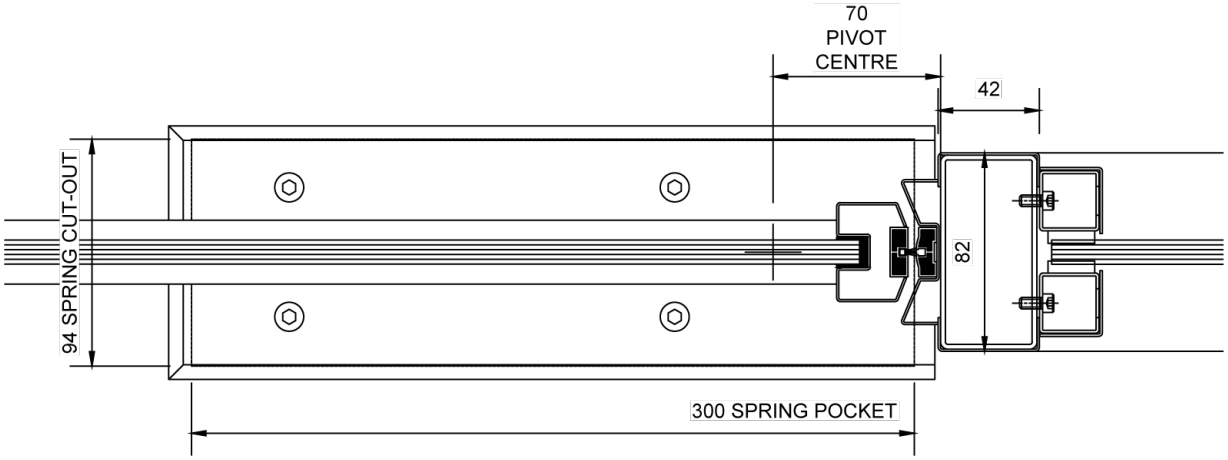

11 Section 5-5′

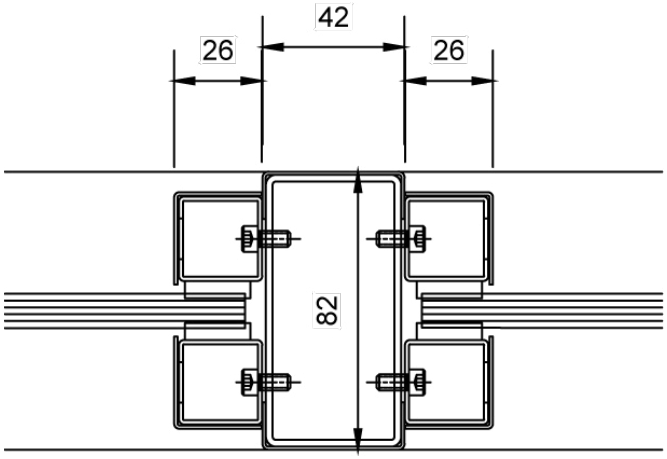

12 Section 6-6′

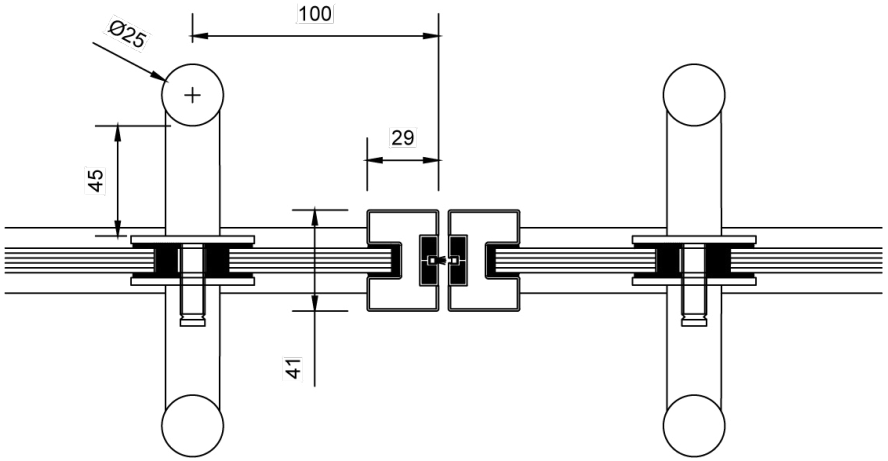

13 Section 7-7′

PYROSTYLE INTEGRITY E60 AUTOMATED DOOR DETAILS

E60 DORMA ED250 AUTOMATIC CLOSER

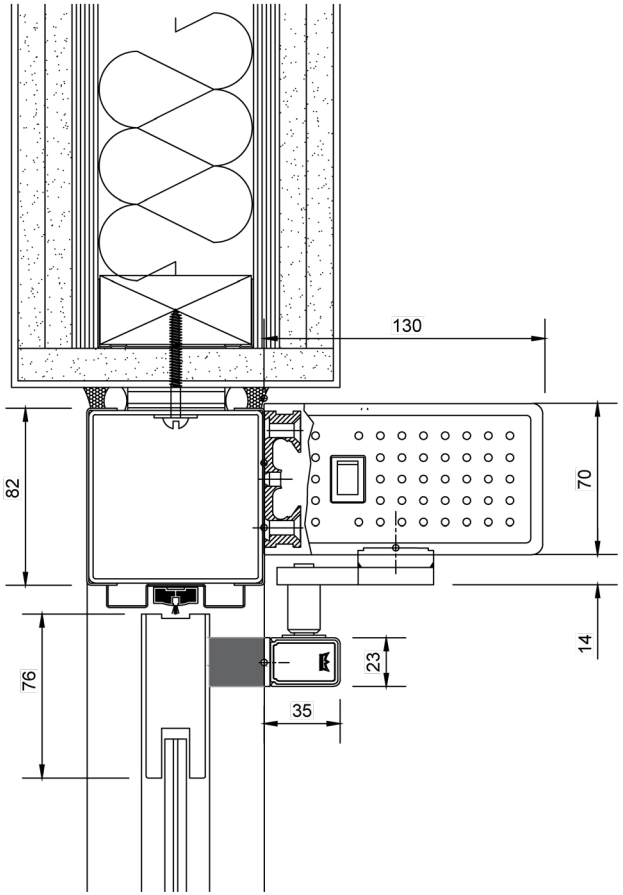

E60 FINGER GUARD SECTION

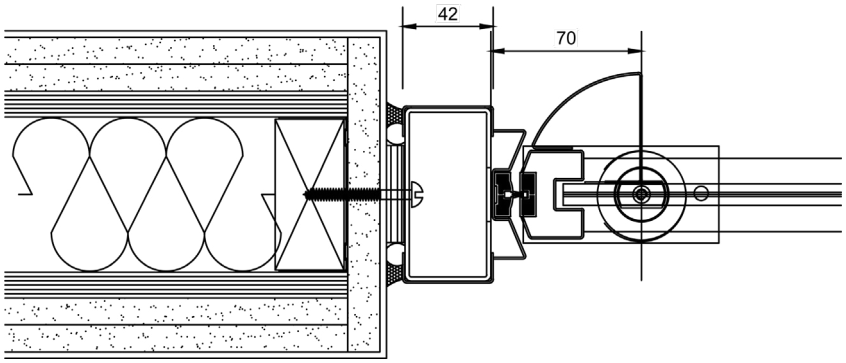

PYROSTYLE INTEGRITY DOOR AND SCREEN FRAME FIXINGS

INTO STUDWALL

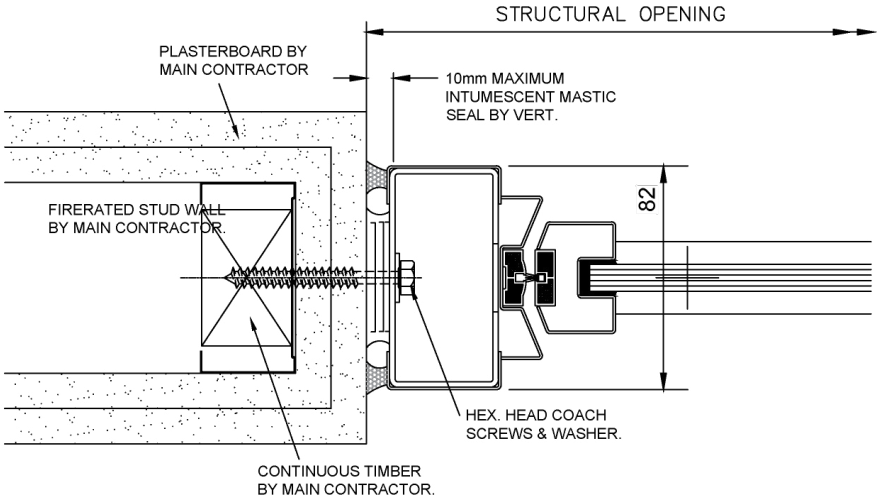

RECESSED INTO WALL

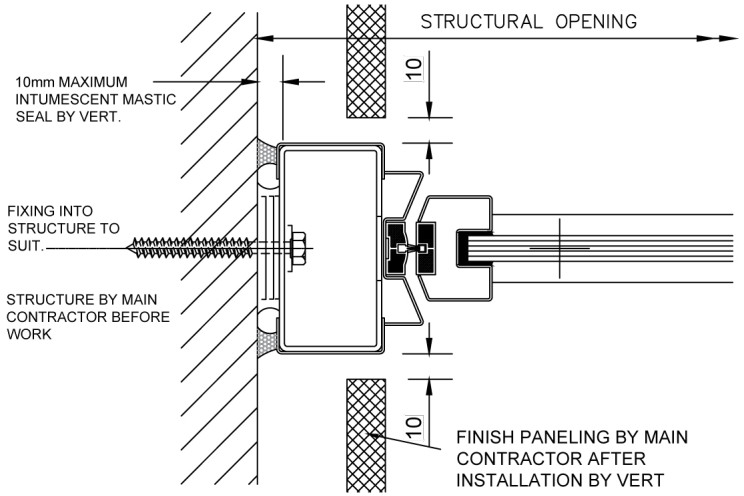

INTO STEEL

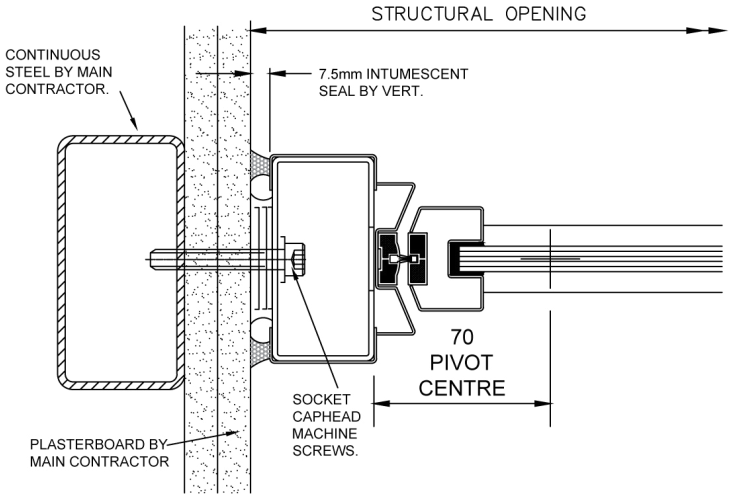

FRAME SURFACE FIXED TO FRAME

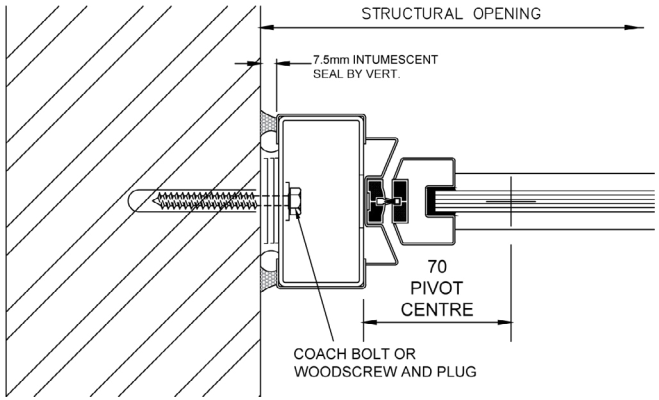

PYROSTYLE INSULATED DOOR AND SCREEN CONFIGURATIONS

1

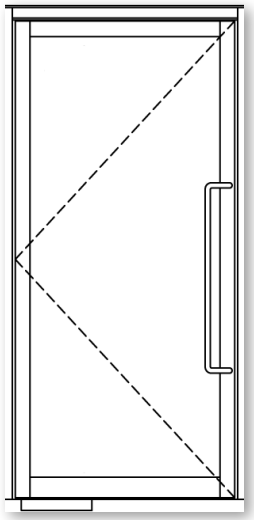

2

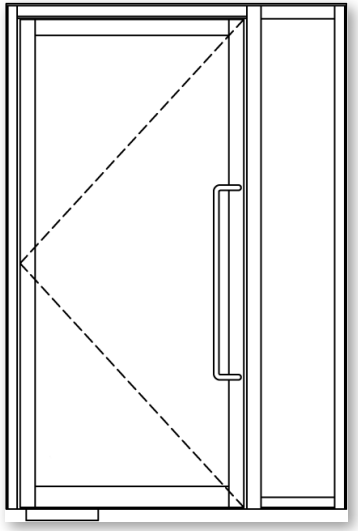

3

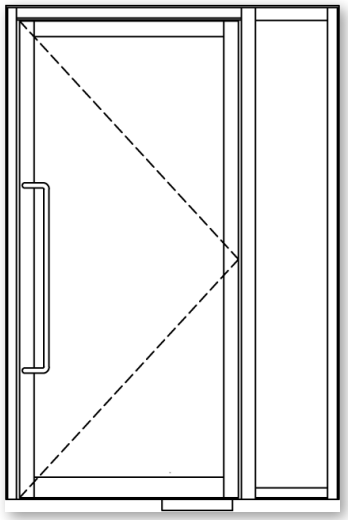

4

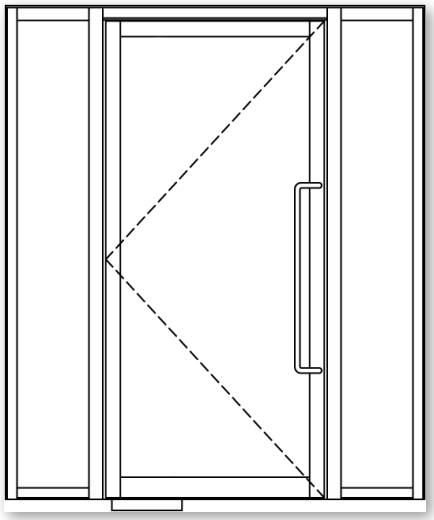

5

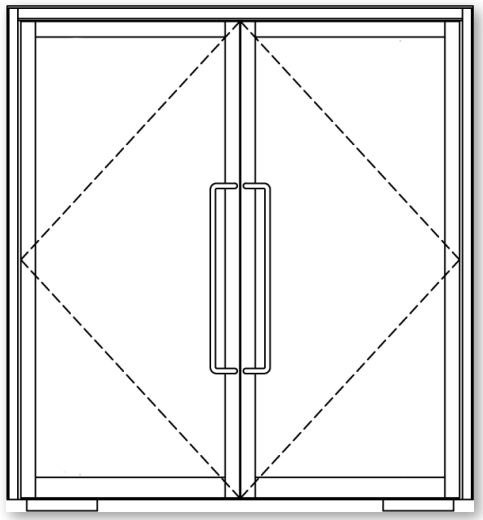

6

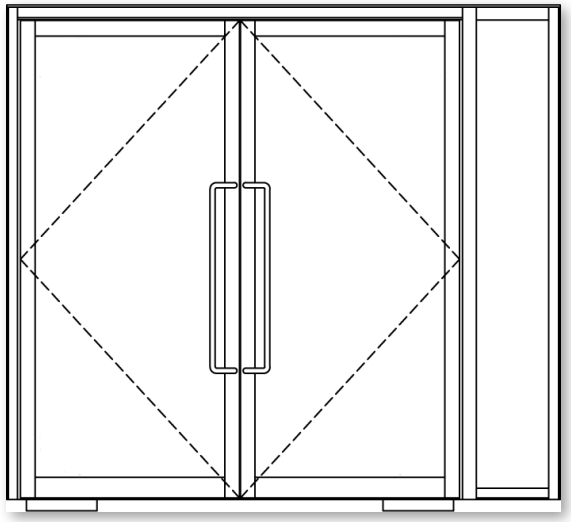

7

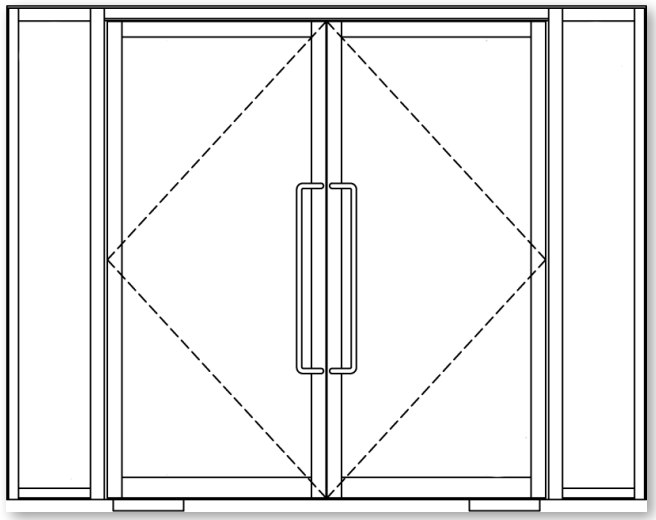

PYROSTYLE INSULATED SINGLE DOOR AND SCREEN MAXIMUM SIZES

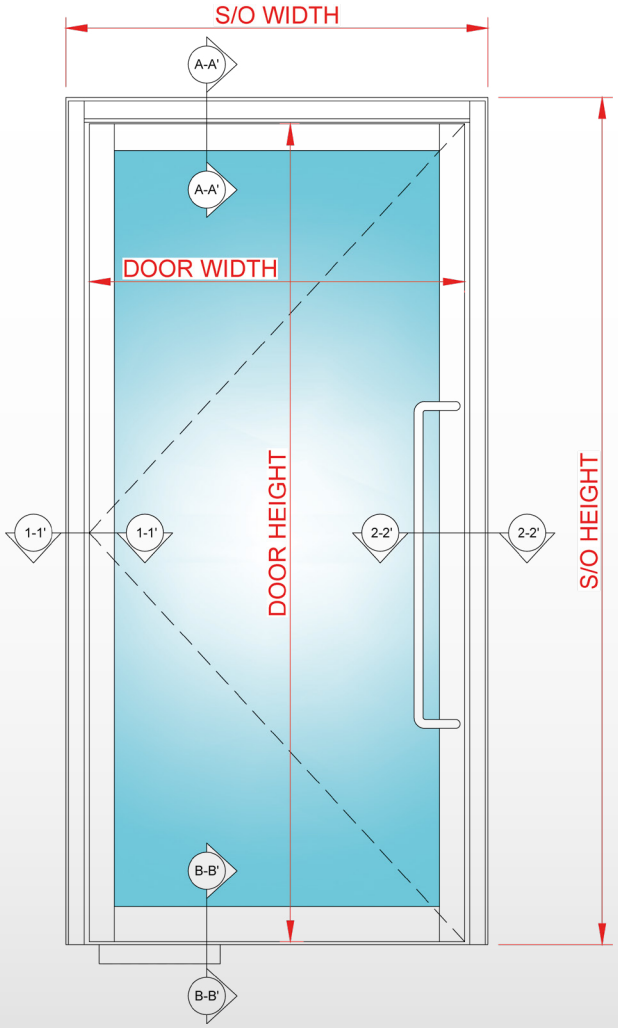

1

- 1181(w) x 2753(h) mm
- 1302(w) x 2459(h) mm

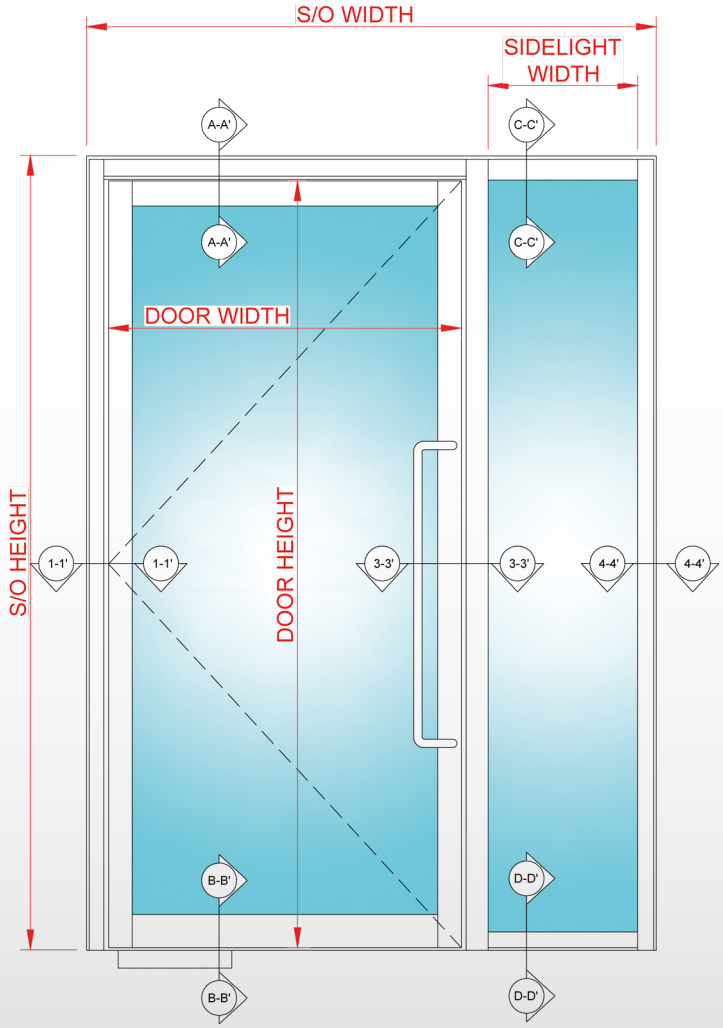

2

- 2266(w) x 2753(h) mm
- 2508(w) x 2459(h) mm

PYROSTYLE INSULATED SINGLE DOOR AND SCREEN MAXIMUM SIZES

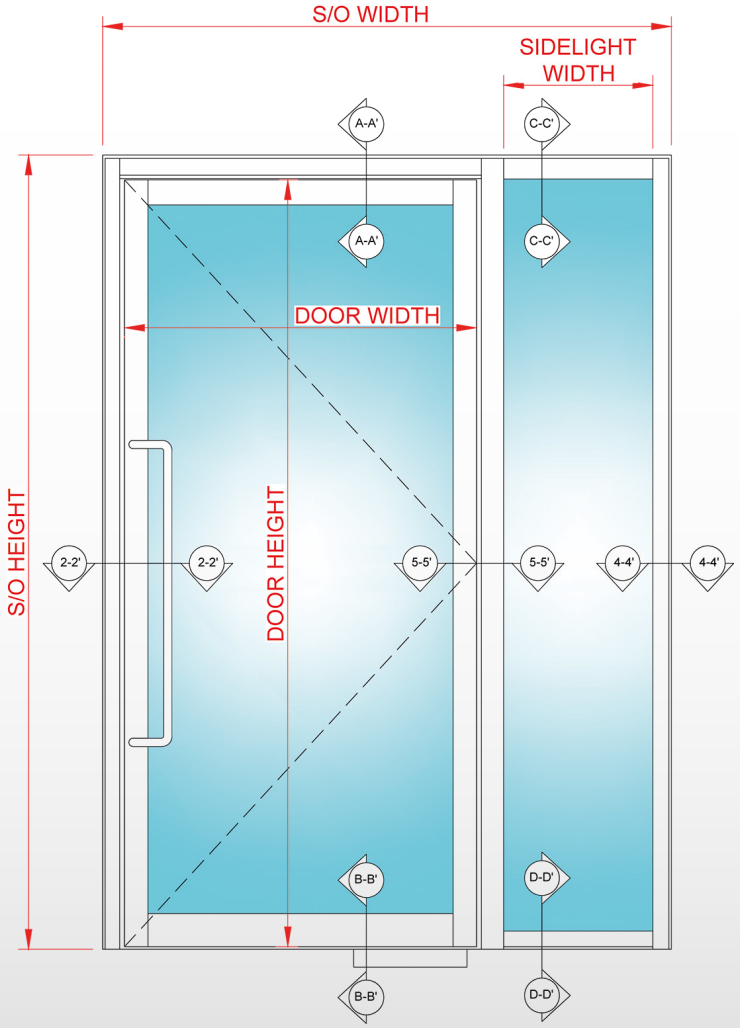

3

- 2266(w) x 2753(h) mm
- 2508(w) x 2459(h) mm

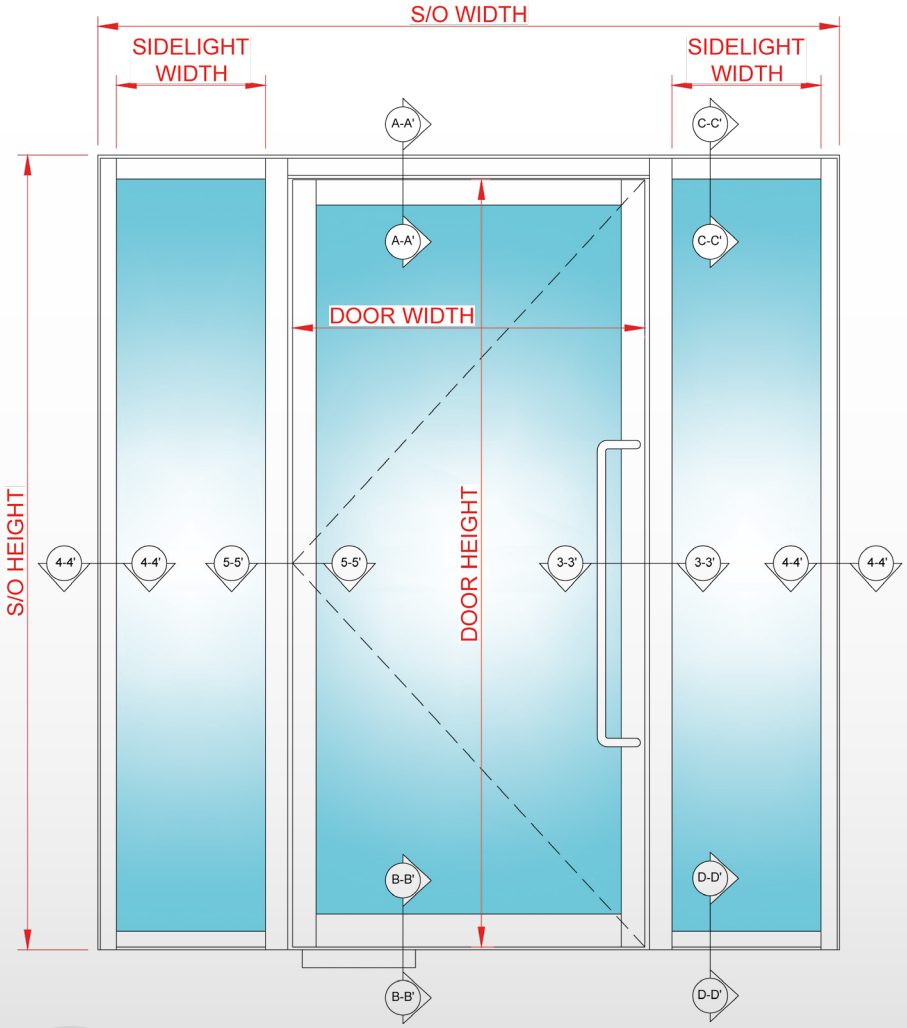

4

- 3351(w) x 2753(h) mm
- 3714(w) x 2459(h) mm

PYROSTYLE INSULATED DOUBLE DOOR AND SCREEN MAXIMUM SIZES

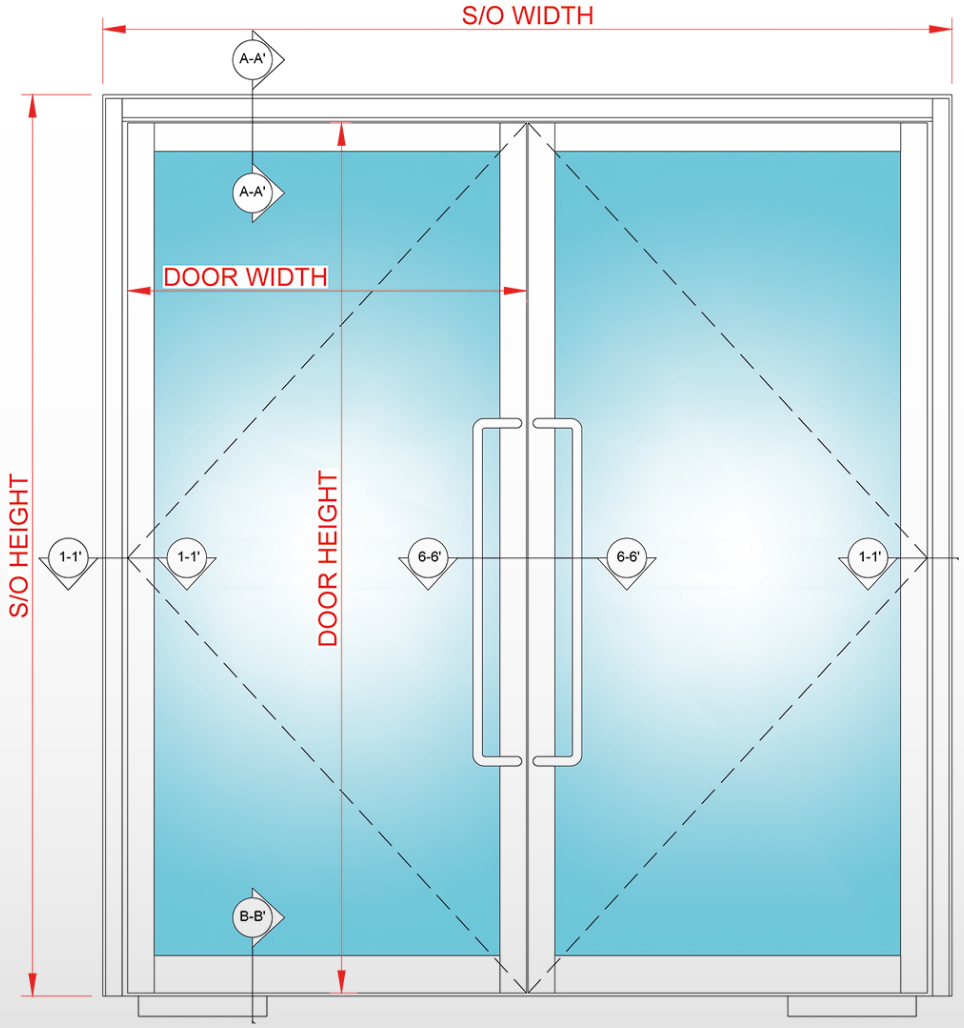

5

- 2235(w) x 2753(h) mm
- 2477(w) x 2459(h) mm

PYROSTYLE INSULATED DOUBLE DOOR AND SCREEN MAXIMUM SIZES

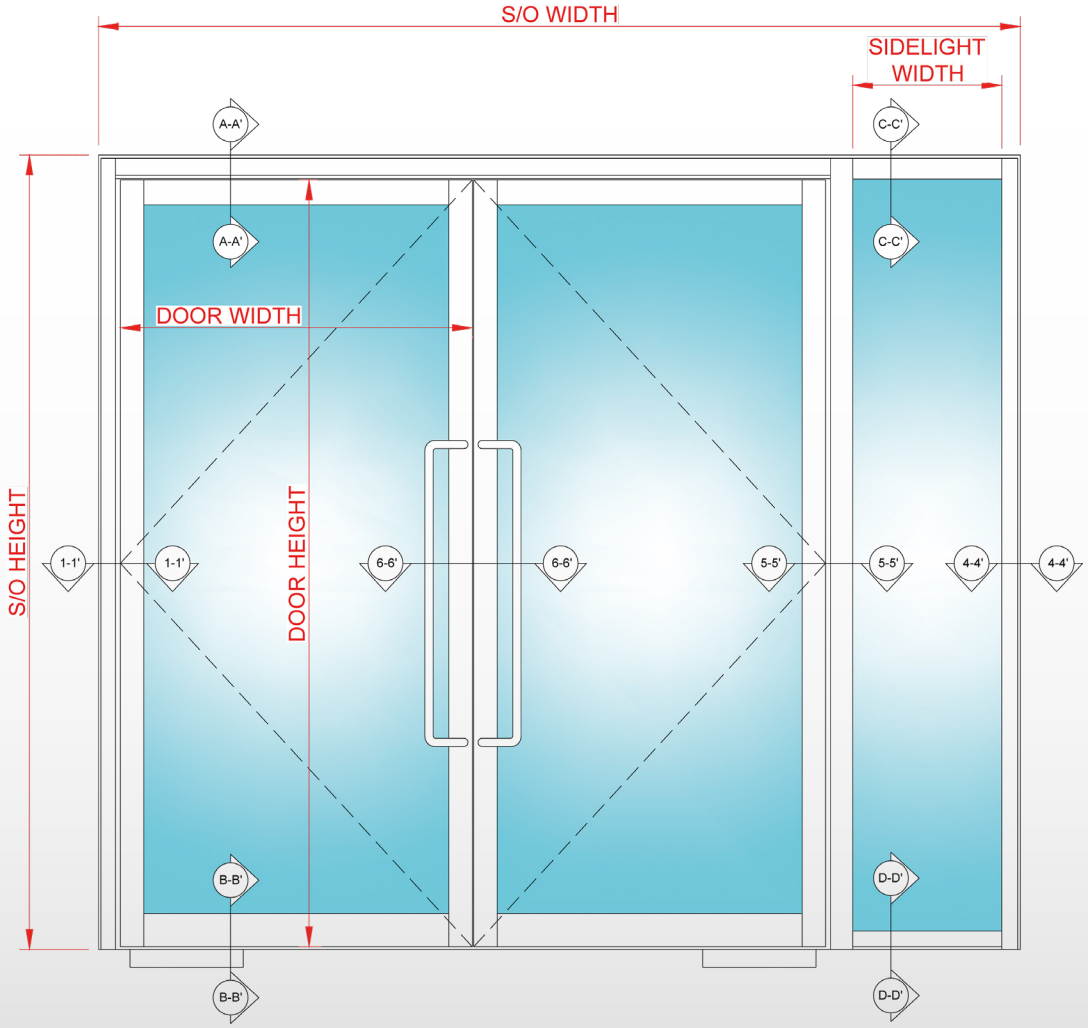

6

- 3320(w) x 2753(h) mm
- 3683(w) x 2459(h) mm

PYROSTYLE INSULATED DOUBLE DOOR AND SCREEN MAXIMUM SIZES

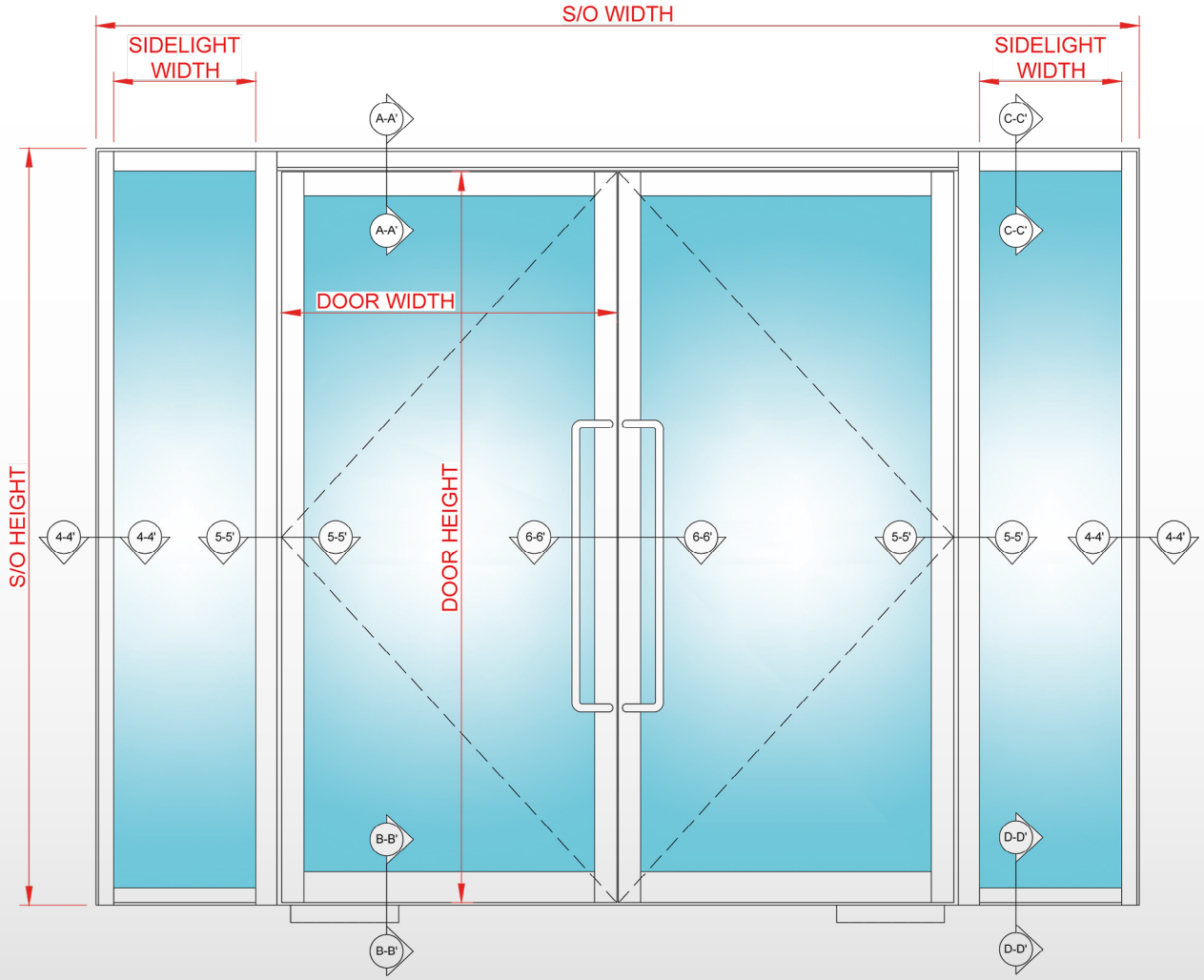

7

- 4405(w) x 2753(h) mm
- 4889(w) x 2459(h) mm

PYROSTYLE INSULATED DOOR AND SCREENS SECTION SPECIFICS

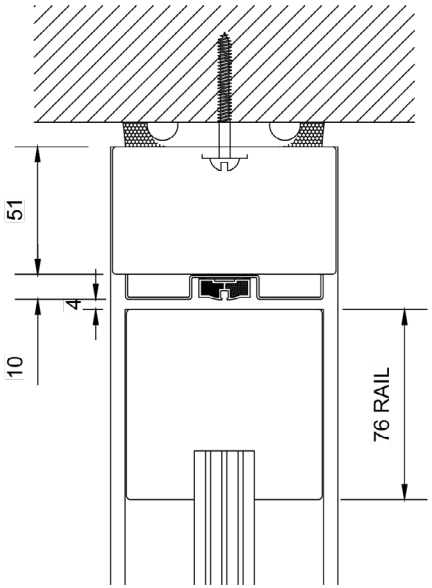

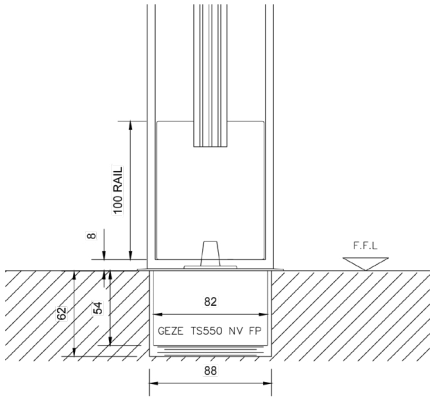

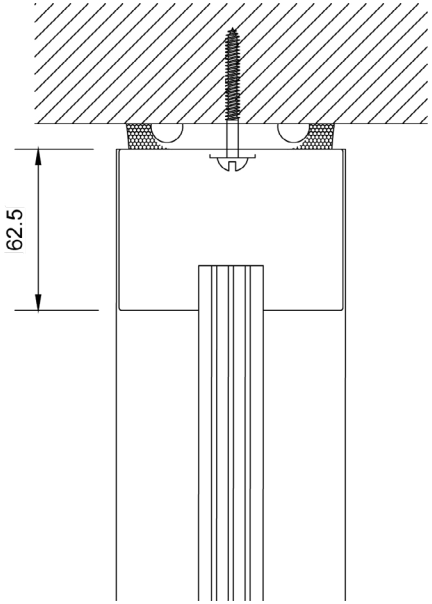

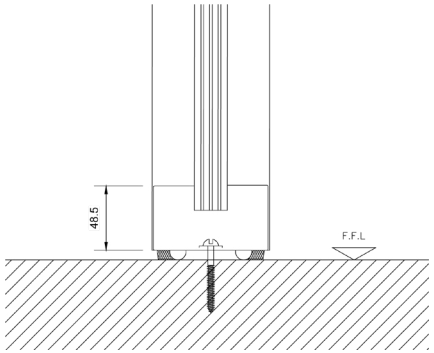

1 Section A-A'

2 Section B-B'

3 Section C-C'

4 Section D-D'

PYROSTYLE INSULATED DOOR AND SCREENS SECTION SPECIFICS

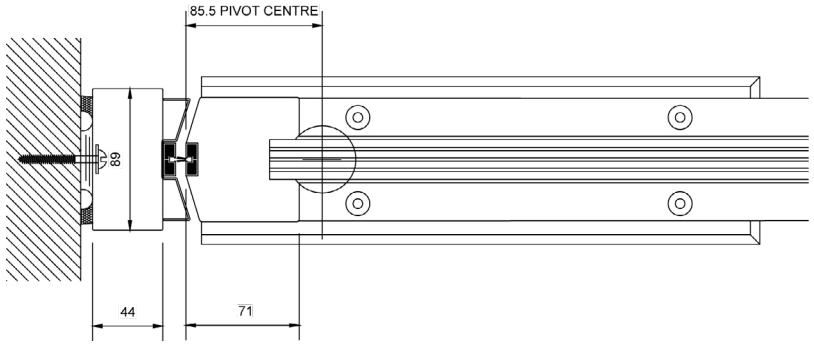

5 Section 1-1′

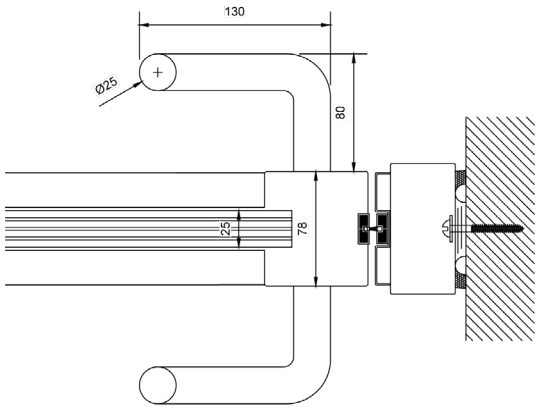

6 Section 2-2′

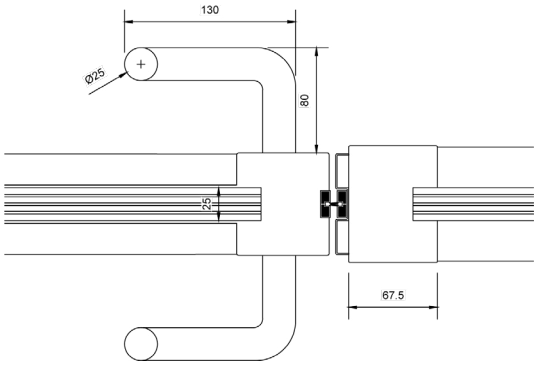

7 Section 3-3′

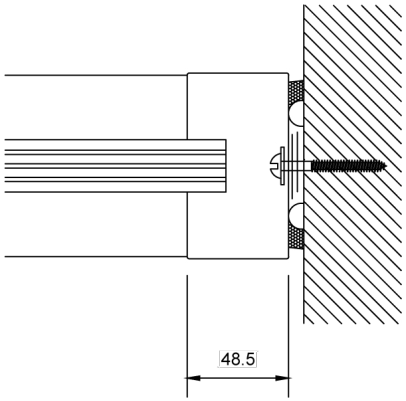

8 Section 4-4′

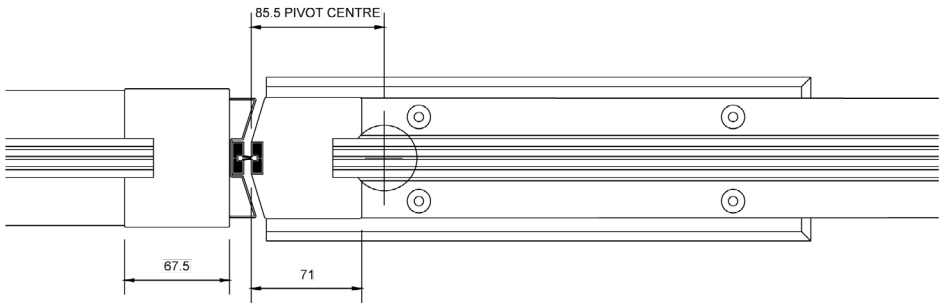

9 Section 5-5′

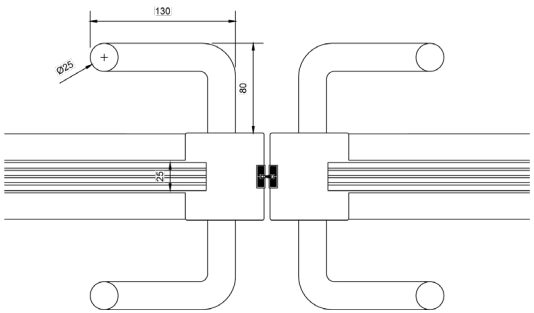

10 Section 6-6′

PYROSTYLE INSULATED EI60 AUTOMATED DOOR DETAILS

EI60 DORMA ED250 AUTOMATIC CLOSER

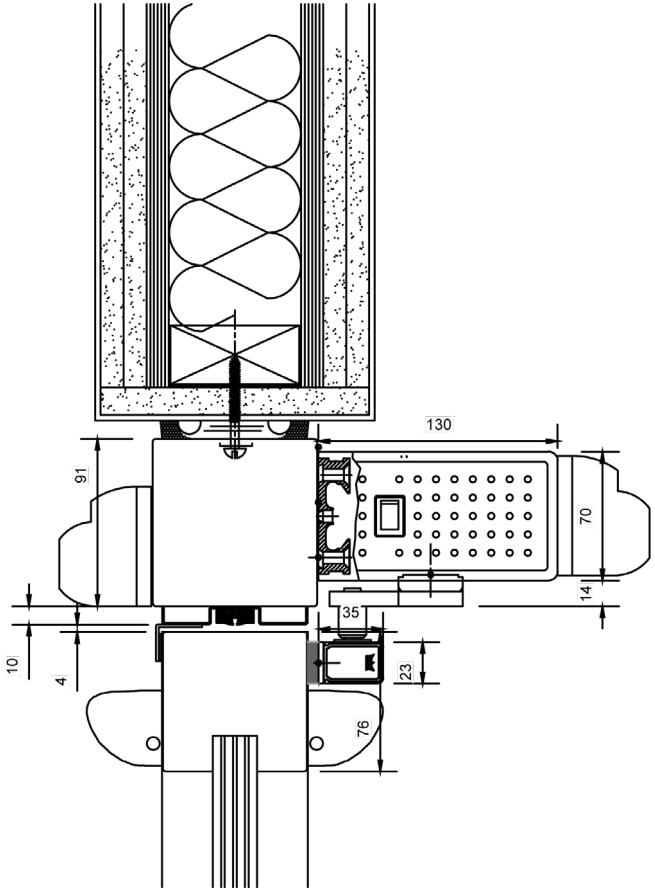

EI60 FINGER GUARD

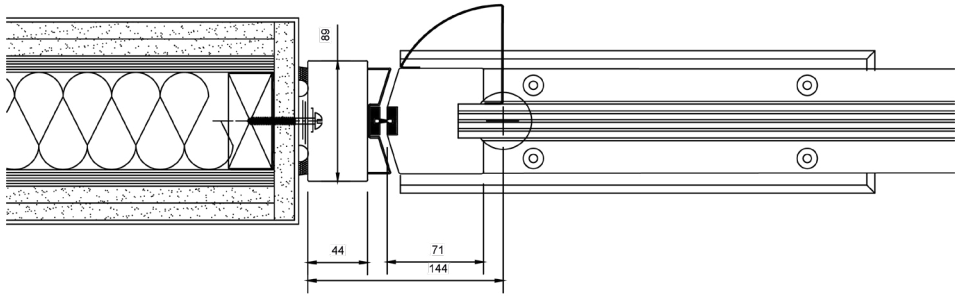

PYROSTYLE INSULATED DOOR AND SCREEN FRAME FIXINGS

INTO STUDWALL

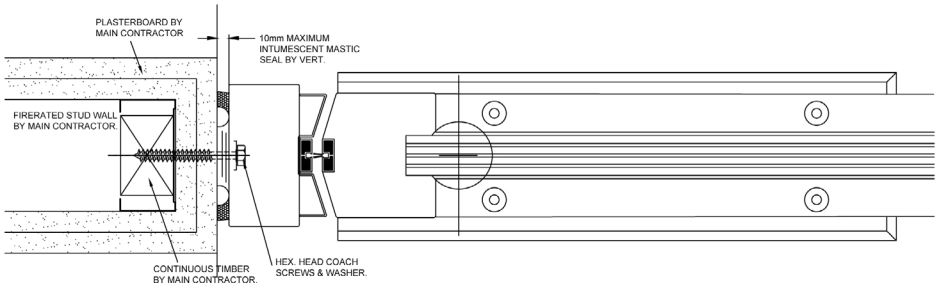

MEETING STILES

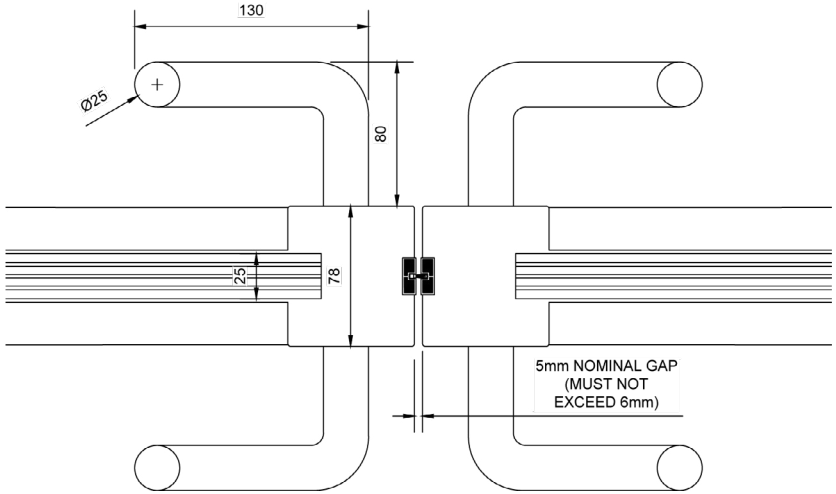

INTO STEEL

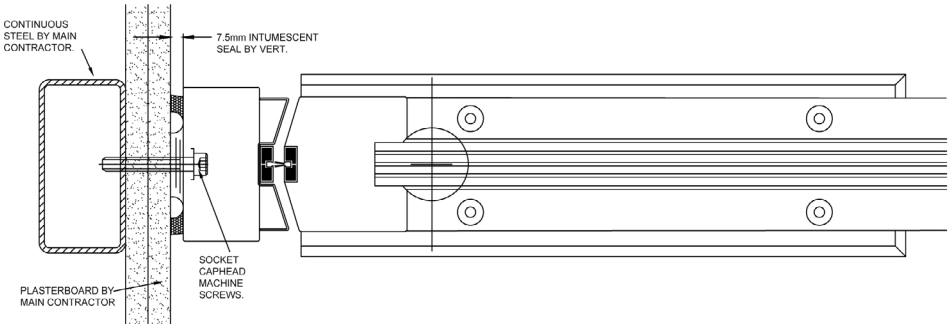

FRAME SURFACE FIXED TO WALL

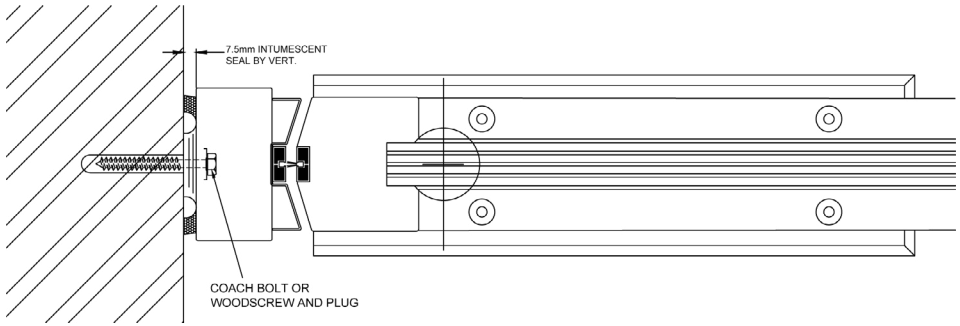

PYROSTYLE
FIRE RATED DOORS & SCREENS

34A Hobbs Industrial Estate
Eastbourne Road
New Chapel
Lingfield,Surrey
RH7 6HN

01342 836630

info@owsfirerated.co.uk

www.pyrostyledoors.co.uk